Item No. _____
Quantity _____

BEVERAGE-AIR

3779 Champion Blvd., Winston-Salem, NC 27105
1-888-845-9800 Fax# 1-336-245-6453
http://www.Beverage-Air.com

Commercial Refrigeration Equipment
General Specification

FOOD PREPARATION SERIES PREP TABLES

SPE48 ELITE SERIES
MEGA TOP

MODELS:
SPE48-12M
SPE48-18M

SPE48 ELITE SERIES — MEGA TOP

Fifty percent greater pan capacity than the all around standard prep table. Features enhanced refrigeration system and new and improved grille system for better airflow and less temperature gradient. Improved design provides better airflow management and uniform temperature distribution throughout the cabinet. Pans are cooled from the bottom, eliminating the necessity of air blanket. Airflow assures that product in open containers is kept below 41°F and above freezing. This translates into increased product shelf life, higher quality food, better food appearance, fresher product and a reduction of bacteria build-up to combat food-borne illnesses.

CABINET CONSTRUCTION

Exterior construction includes heavy-duty stainless steel finish on front, sides, top, door(s) and grille. Removable hoods and insulated lid assemblies are made of matching stainless steel. Cabinet back and bottom are constructed of galvanized steel. Interior liner is made of anodized aluminum for superior resistance to corrosion.

Doors are mounted to face of cabinet on cartridge style hinges permitting them to self close under their own weight. Hinges also allow doors to stay open 120° and permit easy door removal for service and cleaning if required. A plug in type vinyl magnetic gasket is attached to each door for positive seal. Door handle is made from extruded aluminum with a black anodized finish. It is contoured to permit easy opening of doors with fingers from both top and bottom of handle.

Cabinet insulation is CFC free foamed-in-place polyurethane of two-inch minimum thickness. Six-inch casters, 2 with brakes, are standard. Legs are available as an option.

Cutting board supplied with cabinet is 10” wide constructed of high-density white polyethylene plastic. It is readily removable for cleaning. Two epoxy-coated steel wire shelves per section are supplied as standard. Pans furnished are 4” deep and made of polycarbonate plastic.

REFRIGERATION

More robust refrigeration system provides added capacity and efficiency. Systems are designed using CFC free R134a refrigerant and capillary tube between condenser and evaporator. Recirculated, forced air from evaporator is moved under pans, which are recessed 2” from top of cabinet. Forced air over the condenser is drawn through grille under door as well as the back and bottom of cabinet. Automatic condensate evaporator is provided to eliminate the need of floor drains.

SPE48-12

ELECTRICAL CONNECTION

Units pre-wired at factory and include 8’ long cord and plug

115/60/1
NEMA-5-15P

Available From:

Model Specified	_____	**Store#**	_____
Location	_____	**Quantity**	_____

BEVERAGE-AIR

Food Preparation Table — Mega Top

Models: SPE48-12M, SPE48-18M

MODEL	SPE48-12M	SPE48-18M
EXTERNAL DIMENSIONAL DATA		
Length Overall (inches) Length Overall (mm)	48” 1219	48” 1219
Depth Overall (inches) Depth Overall (mm)	36 5/8” 930	36 5/8” 930
Height Overall— (inches) Height Overall— (mm)	45 1/2” 1156	45 1/2” 1156
Number of doors	2	2
Depth with Door Open 90 °	52 1/4”	52 1/4”
Clear Door Opening (inches)	19 3/8” x 22”	19 3/8” x 22”
INTERNAL DIMENSIONAL DATA		
NET Capacity (cubic ft.) NET Capacity (Liters)	13.9 394	13.9 394
Internal Length Overall (inches) Internal Length Overall (mm)	44” 1118	44” 1118
Internal Depth Overall (inches) Internal Depth Overall (mm)	20” 508	20” 508
Internal Height Overall—(inches) Internal Height Overall—(mm)	18” 457	18” 457
Number of shelves	4	4
ELECTRICAL DATA		
Full Load Amperes 115/60/1	5	5
ENERGY CONSUMPTION (KWH)	4	4
REFRIGERATION DATA		
Horsepower	1/4	1/4
WEIGHT DATA		
Gross Weight (Crated lbs)	320	338
Gross Weight (Crated kg)	145	153

PLAN VIEWS

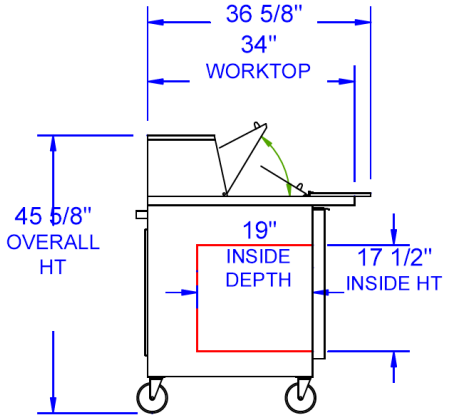

END VIEW

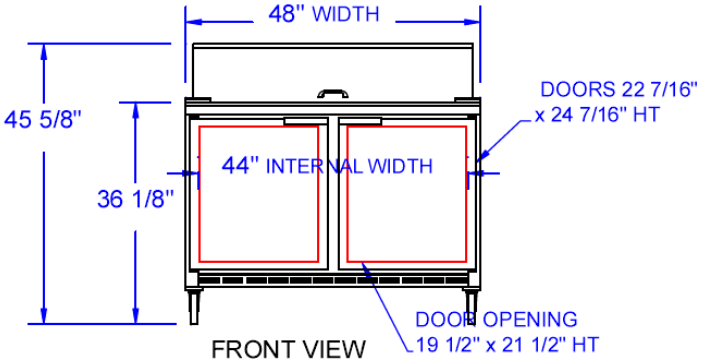

FRONT VIEW

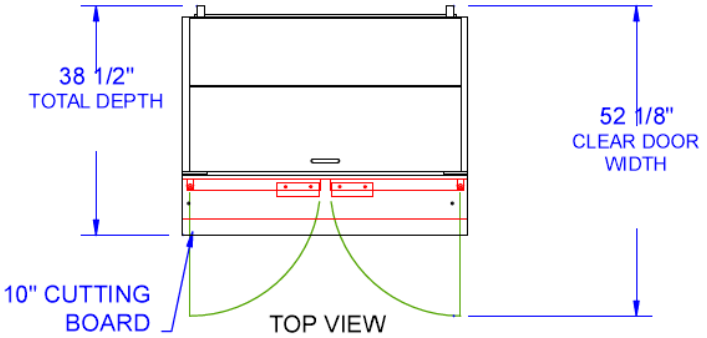

TOP VIEW

SPE48-12M TOP VIEW

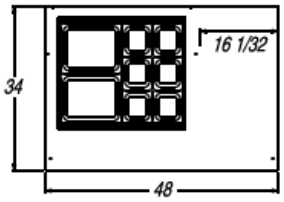

SPE48-18M TOP VIEW

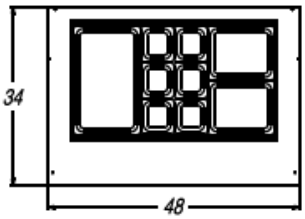

BEVERAGE-AIR® CORPORATION

3779 Champion Blvd. • Winston-Salem, NC 27105 USA • (336) 245-6400 • Fax (336) 245-6453 • (888) 845-9800 • www.beverage-air.com

Specifications are subject to change without prior notice. 06/10

Tundra Specialties