Item No. _____
Quantity _____

BEVERAGE-AIR

3779 Champion Blvd., Winston-Salem, NC 27105
1-888-845-9800 Fax# 1-336-245-6453
http://www.Beverage-Air.com

Commercial Refrigeration Equipment
General Specification

FOOD PREPARATION SERIES PREP TABLES

SPED60 ELITE SERIES
MEGA TOP WITH DRAWERS

MODELS:
SPED60-M

SPED60 ELITE SERIES — MEGA TOP WITH DRAWERS

Fifty percent greater pan capacity than the all-around standard prep table. Features enhanced refrigeration system. Improved airflow for less temperature gradient and uniform temperature distribution throughout the cabinet. Pans are cooled from the bottom, eliminating the necessity of air blanket. Airflow assures that product in open containers is kept below 41°F and above freezing. This translates into increased product shelf life, higher quality food, better food appearance, fresher product and a reduction of bacteria build-up to combat food-borne illnesses.

CABINET CONSTRUCTION

Exterior construction includes heavy-duty stainless steel finish on front, sides, top, drawers and grille. Removable hoods and insulated lid assemblies are made of matching stainless steel. Cabinet back and bottom are constructed of galvanized steel. Interior liner is made of anodized aluminum for superior resistance to corrosion.

In cabinets with doors and drawers, doors are mounted to face of cabinet on cartridge-style hinges permitting them to self close under their own weight. Hinges also allow doors to stay open 120° and permit easy door removal for service and cleaning if required. A plug-in type vinyl magnetic gasket is attached to each door for positive seal.

Drawer frames are constructed of heavy-duty stainless steel and are supported on heavy-duty telescoping drawer slides for maximum support of stored food products. The drawer slides have a locking mechanism that prevents the drawers from being inadvertently pulled off the cabinets. Upper pull-out drawers accommodate 6” deep pans. Lower pull-out drawers accommodate two 4” deep pans. Heavy-duty pan divider supports are supplied. Foodservice pans for drawers are not included. Snap-type vinyl magnetic gasket is attached to each drawer for positive seal. Top drawer extends 17 3/4” (when opened) and bottom drawer extends 15 3/4” (when opened).

Cabinet insulation is CFC and HCFC-free foamed-in-place polyurethane of two-inch minimum thickness. Six-inch casters, 2 with brakes, are standard. Legs are available as an option.

Cutting board supplied with cabinet is 10” wide constructed of high-density white polyethylene plastic. It is readily removable for cleaning. Pans furnished for top are 4” deep and made of polycarbonate plastic.

REFRIGERATION

More robust refrigeration system provides added capacity and efficiency. Systems are designed using CFC and HCFC-free R134a refrigerant. Recirculated, forced air from evaporator is moved under pans, which are recessed 2” from top of cabinet. Forced air over the condenser is drawn through grille under bottom drawer as well as the back and bottom of cabinet. Automatic condensate evaporator is provided to eliminate the need of floor drains.

SPED60-24M-2 (pictured)

ELECTRICAL CONNECTION
Units pre-wired at factory and include 8’ long cord and plug set.

115/60/1
NEMA-5-15P

*Note: Not all markings may apply to all model variations.

Available From:

Model Specified	_____	**Store#**	_____
Location	_____	**Quantity**	_____

BEVERAGE-AIR

Food Prep Table — Mega Top With Drawers

Models: SPED60

MODEL	SPED60-12M-2	SPED60-12M-4	SPED60-18M-2	SPED60-18M-4	SPED60-24M-2	SPED60-24M-4
EXTERNAL DIMENSIONAL DATA						
Length Overall (inches) Length Overall (mm)	60" 1524	60" 1524	60" 1524	60" 1524	60" 1524	60" 1524
Depth Overall (inches) Depth Overall (mm)	36 5/8" 930	36 5/8" 930	36 5/8" 930	36 5/8" 930	36 5/8" 930	36 5/8" 930
Height Overall— (inches) Height Overall— (mm)	45 1/2" 1156	45 1/2" 1156	45 1/2" 1156	45 1/2" 1156	45 1/2" 1156	45 1/2" 1156
Number of drawers	2	4	2	4	2	4
Number of doors	1	-	1	-	1	-
Top Drawer Extension (when opened)	17 3/4"	17 3/4"	17 3/4"	17 3/4"	17 3/4"	17 3/4"
Bottom Drawer Extension (when opened)	15 3/4"	15 3/4"	15 3/4"	15 3/4"	15 3/4"	15 3/4"
INTERNAL DIMENSIONAL DATA						
NET Capacity (cubic ft.) NET Capacity (Liters)	17.1 484	17.1 484	17.1 484	17.1 484	17.1 484	17.1 484
Internal Length Overall (inches) Internal Length Overall (mm)	56" 1422	56" 1422	56" 1422	56" 1422	56" 1422	56" 1422
Internal Depth Overall (inches) Internal Depth Overall (mm)	19" 483	19" 483	19" 483	19" 483	19" 483	19" 483
Internal Height Overall—(inches) Internal Height Overall—(mm)	23" 584	23" 584	23" 584	23" 584	23" 584	23" 584
ELECTRICAL DATA						
Full Load Amperes 115/60/1	9.6	9.6	9.6	9.6	9.6	9.6
REFRIGERATION DATA						
Horsepower	1/3	1/3	1/3	1/3	1/3	1/3
WEIGHT DATA						
Gross Weight (Crated lbs)	329	329	350	360	410	410
Gross Weight (Crated kg)	149	149	159	163	186	186

Note: Not all markings may apply to all model variations.

***N/A**:: Not available at time of printing.

PLAN VIEWS

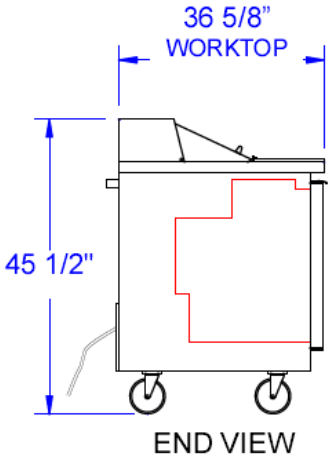

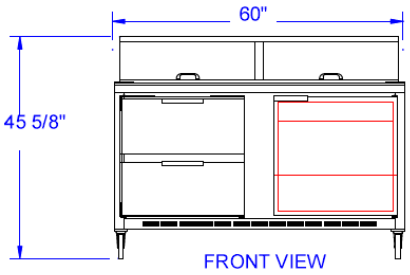

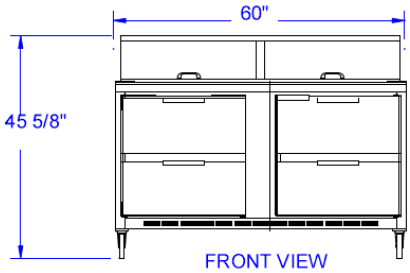

TOP PAN CONFIGURATIONS

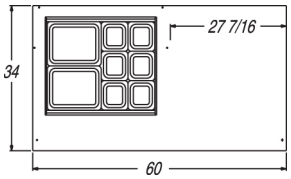

SPED60-12M

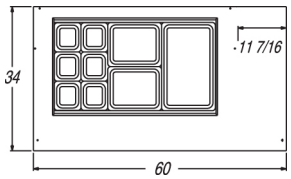

SPED60-18M

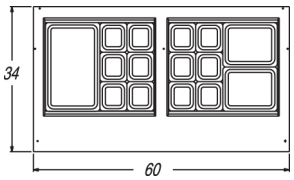

SPED60-24M

DRAWER SUPPORT CAPACITY

MODEL	# OF PAN SUPPORTS (SUPPLIED)	POSSIBLE PAN COMBINATION
SPED60	2	1 FULL SIZE PAN
		2 HALF SIZE PANS
		6 1/6TH SIZE PANS
		3 1/3RD SIZE PANS

SPED60-16

BEVERAGE-AIR® CORPORATION

3779 Champion Blvd. • Winston-Salem, NC 27105 USA • (336) 245-6400 • Fax (336) 245-6453 • (888) 845-9800 • www.beverage-air.com

Specifications are subject to change without prior notice. 06/10

Tundra Specialties