Item No. _____
Quantity _____

BEVERAGE-AIR

3779 Champion Blvd., Winston-Salem, NC 27105
1-888-845-9800 Fax# 1-336-245-6453
http://www.Beverage-Air.com

Commercial Refrigeration Equipment
General Specification

FOOD PREPARATION SERIES PREP TABLES

SPE72 ELITE SERIES
CUTTING TOP

MODELS:
SPE72-08C
SPE72-10C
SPE72-12C
SPE72-18C

SPE72 ELITE SERIES — CUTTING TOP

Larger 17” wide cutting board prep table. Features enhanced refrigeration system. Improved airflow and less temperature gradient inside the cabinet. Better airflow management and uniform temperature distribution throughout the cabinet. Pans are cooled from the bottom, eliminating the necessity of air blanket. Airflow assures that product in open containers is kept below 41°F and above freezing. This translates into increased product shelf life, higher quality food, better food appearance, fresher product and a reduction of bacteria build-up to combat food-borne illnesses.

CABINET CONSTRUCTION

Exterior construction includes heavy-duty stainless steel finish on front, sides, top, door(s) and grille. Removable hoods and insulated lid assemblies are made of matching stainless steel. Cabinet back and bottom are constructed of galvanized steel. Interior liner is made of anodized aluminum for superior resistance to corrosion.

Doors are mounted to face of cabinet on cartridge style hinges permitting them to self close under their own weight. Hinges also allow doors to stay open 120° and permit easy door removal for service and cleaning if required. A plug in type vinyl magnetic gasket is attached to each door for positive seal. Door handle is made from extruded aluminum with a black anodized finish. It is contoured to permit easy opening of doors with fingers from both top and bottom of handle.

Cabinet insulation is CFC free foamed-in-place polyurethane of two-inch minimum thickness. Six-inch casters, 2 with brakes, are standard. Legs are available as an option.

Cutting board supplied with cabinet is 17” wide constructed of high-density white polyethylene plastic. It is readily removable for cleaning. Two epoxy-coated steel wire shelves are supplied as standard. Pans furnished are 4” deep and made of polycarbonate plastic.

REFRIGERATION

More robust refrigeration system provides added capacity and efficiency. Systems are designed using CFC free R134a refrigerant. Forced air from evaporator is moved under pans, which are recessed 2” from top of cabinet. Forced air over the condenser is drawn from back and bottom of cabinet. Automatic condensate evaporator is provided to eliminate the need of floor drains.

SPE72-18C

ELECTRICAL CONNECTION

Units pre-wired at factory and include 8’ long cord and plug

115/60/1
NEMA-5-15P

Available From:

Model Specified	_____	**Store#**	_____
Location	_____	**Quantity**	_____

BEVERAGE-AIR

Food Preparation Table — Cutting Top

Models: SPE72-08C, SPE72-10C, SPE72-12C, SPE72-18C

MODEL	SPE72-08C	SPE72-10C	SPE72-12C	SPE72-18C
EXTERNAL DIMENSIONAL DATA				
Length Overall (inches) Length Overall (mm)	72” 1829	72” 1829	72” 1829	72” 1829
Depth Overall (inches) Depth Overall (mm)	36” 914	36” 914	36” 914	36” 914
Height Overall— (inches) Height Overall— (mm)	41 11/16” 1059	41 11/16” 1059	41 11/16” 1059	41 11/16” 1059
Number of doors	3	3	3	3
Depth with Door Open 90 °	50 7/8”	50 7/8”	50 7/8”	50 7/8”
Clear Door Opening (inches)	19 1/2” x 21 1/2”	19 1/2” x 21 1/2”	19 1/2” x 21 1/2”	19 1/2” x 21 1/2”
INTERNAL DIMENSIONAL DATA				
NET Capacity (cubic ft.) NET Capacity (Liters)	21.5 609	21.5 609	21.5 609	21.5 609
Internal Length Overall (inches) Internal Length Overall (mm)	68” 1727	68” 1727	68” 1727	68” 1727
Internal Depth Overall (inches) Internal Depth Overall (mm)	19 1/4” 489	19 1/4” 489	19 1/4” 489	19 1/4” 489
Internal Height Overall—(inches) Internal Height Overall—(mm)	17 1/2” 445	17 1/2” 445	17 1/2” 445	17 1/2” 445
Number of shelves	6	6	6	6
ELECTRICAL DATA				
Full Load Amperes 115/60/1	9.6	9.6	9.6	9.6
ENERGY CONSUMPTION (KWH)	4.4	4.4	4.4	4.4
REFRIGERATION DATA				
Horsepower	1/3	1/3	1/3	1/3
WEIGHT DATA				
Gross Weight (Crated lbs)	431	430	406	355
Gross Weight (Crated kg)	196	195	184	161

PLAN VIEWS

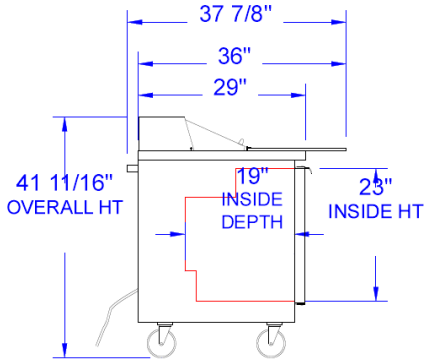

END SIDE VIEW

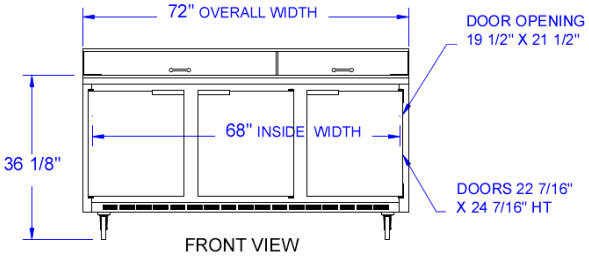

FRONT VIEW

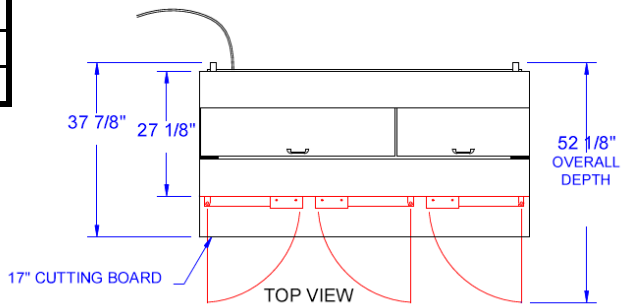

TOP VIEW

SPE72-08C TOP VIEW

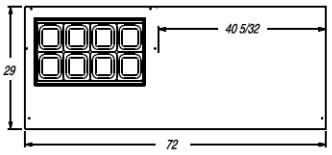

SPE72-10C TOP VIEW

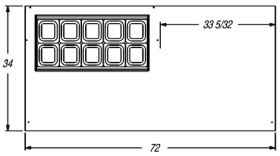

SPE72-12C TOP VIEW

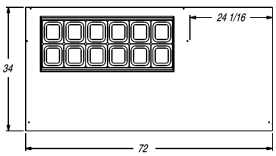

SPE72-18C TOP VIEW

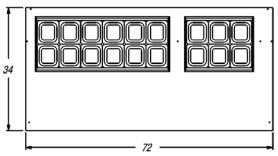

BEVERAGE-AIR® CORPORATION

3779 Champion Blvd. • Winston-Salem, NC 27105 USA • (336) 245-6400 • Fax (336) 245-6453 • (888) 845-9800 • www.beverage-air.com

Specifications are subject to change without prior notice. 06/10