Item No. _____
Quantity _____

BEVERAGE-AIR

3779 Champion Blvd., Winston-Salem, NC 27105
1-888-845-9800 Fax# 1-336-245-6453
http://www.Beverage-Air.com

Commercial Refrigeration Equipment
General Specification

FOOD PREPARATION SERIES PREP TABLES

SPED48 ELITE SERIES
STANDARD TOP WITH DRAWERS

MODELS:
SPED48

SPED48 ELITE SERIES — STANDARD TOP WITH DRAWERS

All around prep table with enhanced refrigeration system. Improved airflow for less temperature gradient and uniform temperature distribution throughout the cabinet. Pans are cooled from the bottom, eliminating the necessity of air blanket. Airflow assures that product in open containers is kept below 41°F and above freezing. This translates into increased product shelf life, higher quality food, better food appearance, fresher product and a reduction of bacteria build-up to combat food-borne illnesses.

CABINET CONSTRUCTION

Exterior construction includes heavy-duty stainless steel finish on front, sides, top, drawers and grille. Removable hoods and insulated lid assemblies are made of matching stainless steel. Cabinet back and bottom are constructed of galvanized steel. Interior liner is made of anodized aluminum for superior resistance to corrosion.

In cabinets with doors and drawers, doors are mounted to face of cabinet on cartridge-style hinges permitting them to self close under their own weight. Hinges also allow doors to stay open 120° and permit easy door removal for service and cleaning if required. A plug-in type vinyl magnetic gasket is attached to each door for positive seal.

Drawer frames are constructed of heavy-duty stainless steel and are supported on heavy-duty telescoping drawer slides for maximum support of stored food products. Slides have locking mechanism to prevent from drawers being pulled off of cabinets. Upper pull-out drawers accommodate 6” deep pans. Lower pull-out drawers accommodate two 4” deep pans. Heavy-duty pan divider supports are supplied. Foodservice pans for drawers are not included. Snap-type vinyl magnetic gasket is attached to each drawer for positive seal. Top drawer extends 17 3/4” (when opened) and bottom drawer extends 15 3/4” (when opened).

Cabinet insulation is CFC and HCFC-free foamed-in-place polyurethane of two-inch minimum thickness. Six-inch casters, 2 with brakes, are standard. Legs are available as an option.

Cutting board supplied with cabinet is 10” wide constructed of high-density white polyethylene plastic. It is readily removable for cleaning. Pans furnished for top are 4” deep and made of polycarbonate plastic.

REFRIGERATION

More robust refrigeration system provides added capacity and efficiency. Systems are designed using CFC and HCFC-free R134a refrigerant. Recirculated, forced air from evaporator is moved under pans, which are recessed 2” from top of cabinet. Forced air over the condenser is drawn through grille under bottom drawer as well as the back and bottom of cabinet. Automatic condensate evaporator is provided to eliminate the need of floor drains.

SPED48-12-2 (pictured)

ELECTRICAL CONNECTION
Units pre-wired at factory and include 8’ long cord and plug set.

115/60/1
NEMA-5-15P

*Note: Not all markings may apply to all model variations.

Available From:

Model Specified	_____	**Store#**	_____
Location	_____	**Quantity**	_____

BEVERAGE-AIR

Food Prep Table — Standard Top With Drawers

Models: SPED48

MODEL	SPED48-08-2	SPED48-08-4	SPED48-10-2	SPED48-10-4	SPED48-12-2	SPED48-12-4
EXTERNAL DIMENSIONAL DATA						
Length Overall (inches) Length Overall (mm)	48" 1219	48" 1219	48" 1219	48" 1219	48" 1219	48" 1219
Depth Overall (inches) Depth Overall (mm)	29 1/4" 743	29 1/4" 743	29 1/4" 743	29 1/4" 743	29 1/4" 743	29 1/4" 743
Height Overall— (inches) Height Overall— (mm)	41 11/16" 1059	41 11/16" 1059	41 11/16" 1059	41 11/16" 1059	41 11/16" 1059	41 11/16" 1059
Number of drawers	2	4	2	4	2	4
Number of doors	1	-	1	-	1	-
Top Drawer Extension (when opened)	17 3/4"	17 3/4"	17 3/4"	17 3/4"	17 3/4"	17 3/4"
Bottom Drawer Extension (when opened)	15 3/4"	15 3/4"	15 3/4"	15 3/4"	15 3/4"	15 3/4"
INTERNAL DIMENSIONAL DATA						
NET Capacity (cubic ft.) NET Capacity (Liters)	13.9 394	13.9 394	13.9 394	13.9 394	13.9 394	13.9 394
Internal Length Overall (inches) Internal Length Overall (mm)	44" 1118	44" 1118	44" 1118	44" 1118	44" 1118	44" 1118
Internal Depth Overall (inches) Internal Depth Overall (mm)	19" 483	19" 483	19" 483	19" 483	19" 483	19" 483
Internal Height Overall—(inches) Internal Height Overall—(mm)	23" 584	23" 584	23" 584	23" 584	23" 584	23" 584
ELECTRICAL DATA						
Full Load Amperes 115/60/1	5	5	5	5	5	5
ENERGY CONSUMPTION (KWH)	4	4	4	4	4	4
REFRIGERATION DATA						
Horsepower	1/4	1/4	1/4	1/4	1/4	1/4
WEIGHT DATA						
Gross Weight (Crated lbs)	275	275	290	290	331	300
Gross Weight (Crated kg)	125	125	132	132	150	136

Note: Not all markings may apply to all model variations.

***N/A**:: Not available at time of printing.

PLAN VIEWS

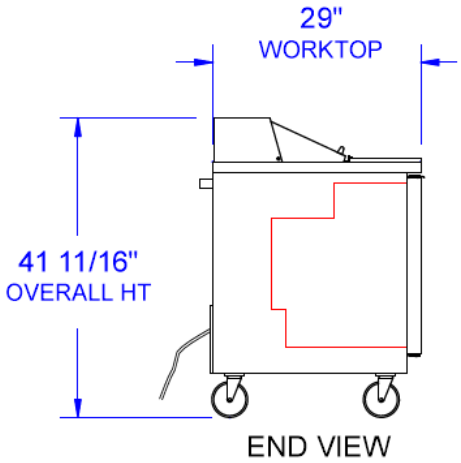

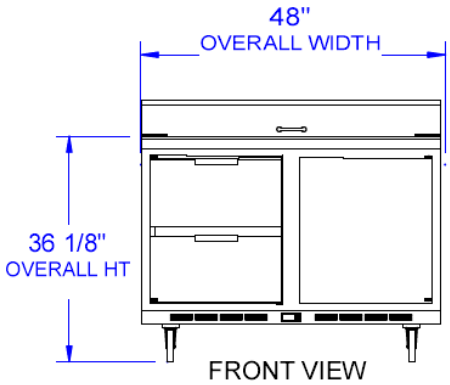

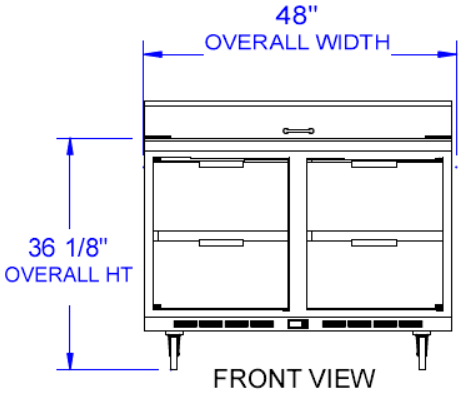

DRAWER SUPPORT CAPACITY

MODEL	# OF PAN SUPPORTS (SUPPLIED)	POSSIBLE PAN COMBINATION
SPED48	1	1 HALF SIZE AND 2 1/6TH SIZE
		1 HALF SIZE AND 1 1/3RD SIZE

TOP PAN CONFIGURATIONS

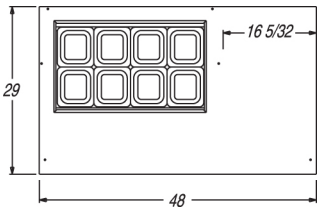

SPED48-08

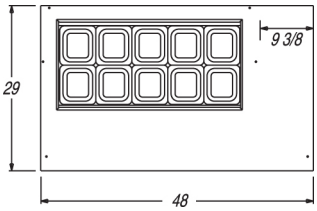

SPED48-10

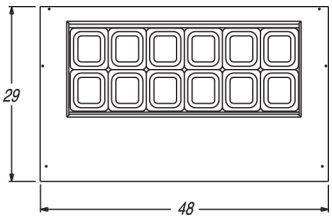

SPED48-12

BEVERAGE-AIR® CORPORATION

3779 Champion Blvd. • Winston-Salem, NC 27105 USA • (336) 245-6400 • Fax (336) 245-6453 • (888) 845-9800 • www.beverage-air.com

Specifications are subject to change without prior notice. 06/10