Item No. _____
Quantity _____

BEVERAGE-AIR

3779 Champion Blvd., Winston-Salem, NC 27105
1-888-845-9800 Fax# 1-336-245-6453
http://www.Beverage-Air.com

Commercial Refrigeration Equipment
General Specification

FOOD PREPARATION SERIES DELI/PIZZA PREP TABLES WITH DRAWERS

DPD SERIES

MODELS:
DPD46-2
DPD67-2
DPD67-4

DPD SERIES "DELI/PIZZA" PREP TABLES

The all-purpose "raised rail," Deli/Pizza Prep Table assures that condiments are held below 41°F and above freezing. It eliminates any chance of freezing product with lids/drawers open or closed and prevents unsanitary defrosting associated with cold wall, refrigerated rails.

CABINET CONSTRUCTION

Exterior construction includes heavy-duty stainless steel finish on front, sides, top, door(s) and grille. Insulated lid assemblies are made of matching stainless steel. Cabinet back and bottom are constructed of galvanized steel. Interior liner is made of anodized aluminum for superior resistance to corrosion.

In cabinets with doors and drawers, doors are mounted to face of cabinet on cartridge-style hinges permitting them to self close under their own weight. Hinges also allow doors to stay open 120° and permit easy door removal for service and cleaning if required. A plug-in type vinyl magnetic gasket is attached to each door for positive seal.

Cabinet insulation is CFC and HCFC-free foamed-in-place polyurethane of two-inch minimum thickness. Three-inch casters, 2 with brakes, are standard. Legs are available as an option.

Cutting board supplied with cabinet is 19" wide constructed of high-density white polyethylene plastic. It is readily removable for cleaning. Two epoxy-coated steel wire shelves are supplied behind each door as standard. Units will accept pans up to 6" deep. Pans are not included.

DRAWER CONSTRUCTION

Drawer frames are constructed of heavy-duty stainless steel. Telescoping design slides make opening drawers smooth and easy. Heavy duty construction ensures maximum support of stored food products. Slides have locking mechanism to prevent drawers from being pulled off of cabinets. For your convenience, drawers accommodate 6" or 4" deep pans. Heavy-duty pan divider supports are supplied. Foodservice pans for drawers are not included. Snap-type vinyl magnetic gasket is attached to each drawer for positive seal. Drawers extend 23" (when opened).

REFRIGERATION

Systems are designed using CFC and HCFC-free, environment friendly R134a refrigerant. Optimized air circulation inside the cabinets ensure uniform temperature distribution. Slightly over and mostly under pans which are recessed approximately 3" from top of raised rail, and into the cabinet directly. Coils are coated for maximum corrosion protection. Innovative design utilizes automatic condensate removal process.

DPD46-2

DPD67-2

ELECTRICAL CONNECTION

Units pre-wired at factory and include 8' long cord and plug

115/60/1
NEMA-5-15P

Available From:

Model Specified	_____	**Store#**	_____
Location	_____	**Quantity**	_____

BEVERAGE-AIR

Food Preparation Deli/Pizza Units With Drawers

Models: DPD46-2, DPD67-2, DPD67-4

MODEL	DPD46-2	DPD67-2	DPD67-4
EXTERNAL DIMENSIONAL DATA			
Length Overall (inches) Length Overall (mm)	46” 1168	67” 1702	67” 1702
Depth Overall (inches) Depth Overall (mm)	38 3/8” 975	38 3/8” 975	38 3/8” 975
Height Overall— (inches) Height Overall— (mm)	43 3/8” 1102	43 3/8” 1102	43 3/8” 1102
Number of doors	-	1	-
Number of drawers	2	2	4
Drawer Extension (when opened)	23”	23”	23”
INTERNAL DIMENSIONAL DATA			
NET Capacity (cubic ft.) NET Capacity (Liters)	16.7 473	27 765	27 765
Internal Length Overall (inches) Internal Length Overall (mm)	26” 660	48” 1219	48” 1219
Internal Depth Overall (inches) Internal Depth Overall (mm)	28” 711	28” 711	28” 711
Internal Height Overall—(inches) Internal Height Overall—(mm)	24” 610	24” 610	24” 610
Number of shelves	-	2	-
ELECTRICAL DATA			
Full Load Amperes 115/60/1	6.3	6.3	6.3
ENERGY CONSUMPTION (KWH)	.27	.23	.23
REFRIGERATION DATA			
Horsepower	1/4	1/4	1/4
WEIGHT DATA			
Gross Weight (Crated lbs)	311	410	410
Gross Weight (Crated kg)	141	186	186

DRAWER PAN CAPACITY

(TOP OR BOTTOM DRAWER)

MODEL	POSSIBLE PAN COMBINATION
ALL DP UNITS	1 FULL SIZE AND 3 1/6 SIZE
	3 1/3 SIZE AND 3 1/6 SIZE

DP46 TOP

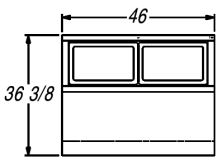

DP67 TOP

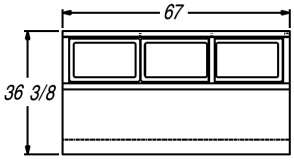

PLAN VIEWS

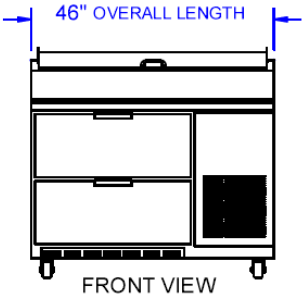

DPD46-2

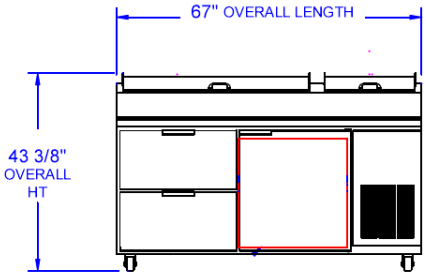

DPD67-2

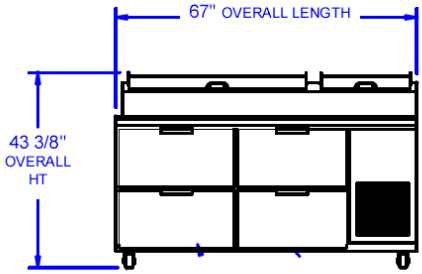

DPD67-4

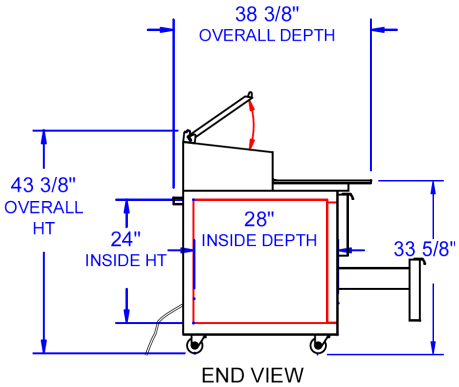

BEVERAGE-AIR® CORPORATION

3779 Champion Blvd. • Winston-Salem, NC 27105 USA • (336) 245-6400 • Fax (336) 245-6453 • (888) 845-9800 • www.beverage-air.com

Specifications are subject to change without prior notice. 06/10

Tundra Specialties