Item No. _____
Quantity _____

BEVERAGE-AIR

3779 Champion Blvd., Winston-Salem, NC 27105
1-888-845-9800 Fax# 1-336-245-6453
http://www.Beverage-Air.com

Commercial Refrigeration Equipment
General Specification

WORKTOP COOK STAND REFRIGERATORS
6 DRAWER EQUIPMENT BASE
WTRCS112 SERIES

MODELS:
WTRCS112-1
WTRCS112-1-120

WORKTOP COOK STAND REFRIGERATOR
Beverage-Air's cook stand refrigerators are designed to accommodate countertop cooking equipment and feature a full marine drip-guard to prevent spills from dripping over the edge. WTRCS112 Series models are available in 2 top configurations (112" Width, 120" Width) to provide the flexibility in your workspace. Refrigerated drawers provide ample food product storage. Working height of 26 3/4" on heavy-duty six-inch (6") casters.

CABINET CONSTRUCTION
Heavy-duty construction with stainless steel on top, front, sides, rear and drip guard top. Interior of cabinet is constructed of corrosion-resistant stainless steel. Drawers are equipped with heavy-duty workflow handle. Cabinet integrity is reinforced by use of structural columns. Cabinets are insulated with foamed-in-place polyurethane insulation of 2" thickness for added strength and maximum energy efficiency. Cabinet back and bottom are constructed of galvanized steel. Interior cabinet is made of corrosion resistant stainless steel.

Exterior solar digital thermometer with battery backup is standard.

DRAWER CONSTRUCTION
Drawer frames are constructed of heavy duty stainless steel and are supported on stainless steel telescoping drawer slides with three stainless steel roller bearing wheels for maximum support of stored food product. Upper pull-out drawers accommodate two 6" deep 12" x 20" pans of combinations of 1/6 size pans or larger. Lower pull-out drawers accommodate two 4" deep 12" x 20" pans or combinations of 1/6 size pans or larger. Heavy duty pan divider supports are supplied. Foodservice pans are not included. A snap in type vinyl magnetic gasket is attached to each drawer for positive seal.

REFRIGERATION
Self-contained refrigeration system utilizes R134a refrigerant metered by a capillary tube system. Automatic (hot gas) condensate evaporation is provided. Interior forced air system, with high humidity evaporator coils, provide the ideal environment for food preservation. Removable front thermometer panel and grille allows for easy access to complete lift-out refrigeration system.

WTRCS112-1

WTRCS112-1-120

ELECTRICAL CONNECTION
Units pre-wired at factory and include 8' long cord and plug

115/60/1
NEMA-5-15P

*Note: Not all markings may apply to all model variations.

Available From:

Model Specified	_____	**Store#**	_____
Location	_____	**Quantity**	_____

BEVERAGE-AIR

PLAN VIEWS

Work Top Refrigerator, Cook Stand Model Series
Models: WTRCS112-1, WTRCS112-1-120

MODEL	WTRCS112-1	WTRCS112-1-120
EXTERNAL DIMENSIONAL DATA		
Length Overall (inches) Length Overall (mm)	112” 2845	120” 3048
Depth Overall (inches) Depth Overall (mm)	32” 813	32” 813
Height Overall— (inches) Height Overall— (mm)	26 3/4” 680	26 3/4” 680
Number of drawers	6	6
Depth with Drawer Open 90 °	57 1/4”	57 1/4”
Upper Drawer Pans	4—12” x 20” x 6”	4—12” x 20” x 6”
Lower Drawer Pans	4—12” x 20” x 4”	4—12” x 20” x 4”
Top Load Rating (lbs) Top Load Rating (kg)	1000 454	1000 454
INTERNAL DIMENSIONAL DATA		
NET Capacity (cubic ft.) NET Capacity (Liters)	24.5 694	24.5 694
ELECTRICAL DATA		
Full Load Amperes 115/60/1	7.3	7.3
REFRIGERATION DATA		
Horsepower	1/4	1/4
WEIGHT DATA		
Gross Weight (Crated lbs)	720	720
Gross Weight (Crated kg)	327	327

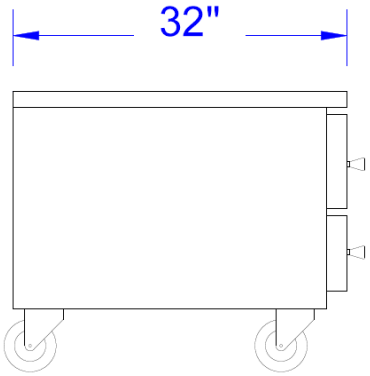

END VIEW

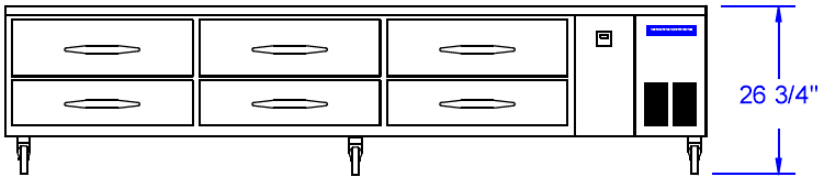

FRONT VIEW

Note: Not all markings may apply to all model variations.
***N/A**:: Not available at time of printing.

WTRCS112-1
TOP VIEW

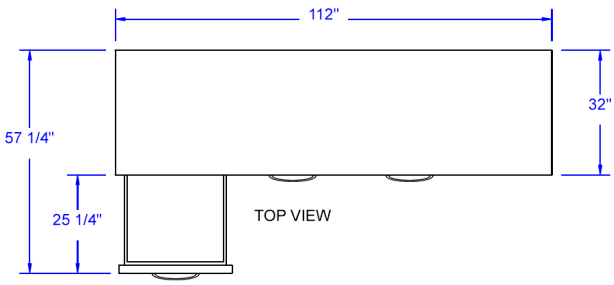

WTRCS112-1-120
TOP VIEW

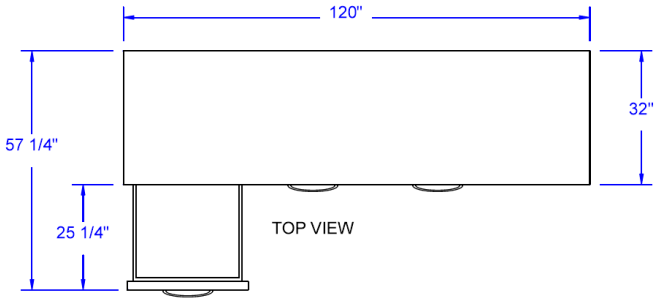

BEVERAGE-AIR® CORPORATION
3779 Champion Blvd. • Winston-Salem, NC 27105 USA • (336) 245-6400 • Fax (336) 245-6453 • (888) 845-9800 • www.beverage-air.com

Specifications are subject to change without prior notice. 06/10
Tundra Specialties