Item No. _____
Quantity _____

BEVERAGE-AIR

3779 Champion Blvd., Winston-Salem, NC 27105
1-888-845-9800 Fax# 1-336-245-6453
http://www.Beverage-Air.com

Commercial Refrigeration Equipment
General Specification

29” DEPTH UNDERCOUNTER FREEZER
FOOD PREPARATION SERIES

MODELS:
UCF27A
UCF48A

UCF-SERIES UNDERCOUNTER UNITS
Versatile, compact (29” deep) models for undercounter and worktop applications for frozen storage of food products. Height is 34-1/2”.

CABINET CONSTRUCTION
Heavy duty construction includes exterior stainless steel on front, sides, door(s) and grille. Cabinet back and bottom are galvanized steel. Interior liner is made of corrosion resistant anodized aluminum. Interior thermometer is standard.

Cabinets are insulated with 2” thick foamed-in-place polyurethane insulation. Sub-top insulated with 1-1/2” foamed-in-place polyurethane insulation. Doors are mounted to cabinet on self-closing, cartridge style hinges with 120° stay open feature. Door openings include low voltage, anti-condensate heaters. Doors are equipped with a snap-in-place vinyl magnetic gasket for positive seal. Convenient, double pull style door handle is made of black anodized aluminum. 6” high casters are standard, 2 include brakes. An 8’ cord set is provided with 115 volt models. Cabinet interior standard with 2 steel wire epoxy coated shelves per section.

REFRIGERATION
Forced air refrigeration systems use capillary tube to meter refrigerant. Automatic electric defrost is standard. Automatic (non-electric) condensate evaporator is provided.

ELECTRICAL
Units wired at factory and ready for connection to a 115/60/1 phase, 15 amp dedicated outlet. 8’ long cord and plug set included.

SPECIAL FEATURES
- Cartridge style door hinges provides positive seal & eliminates door sagging issues (excludes some special units).
- Optional 6” legs or 3” casters available

UCF27A

UCF48A

ELECTRICAL CONNECTION
Units pre-wired at factory and include 8’ long cord and plug set.

115/60/1
NEMA-5-15P

Available From:

Model Specified	_____	**Store#**	_____
Location	_____	**Quantity**	_____

BEVERAGE-AIR

Standard Undercounter Freezer Cabinets

Models: UCF27A / UCF48A

MODEL	UCF27A	UCF48A
EXTERNAL DIMENSIONAL DATA		
Length Overall (inches) Length Overall (mm)	27” 686	48” 1219
Depth Overall (inches) - Less handle w/bumpers Depth Overall (mm) - Less handle w/bumpers	30 7/8” 784	30 3/4” 781
Height Overall— on 6” casters (inches) Height Overall—on 6” casters (mm)	34 1/2” 876	34 1/2” 876
Depth with Door Open 90 º	55 1/4”	52 1/4”
Clear Door Opening (inches)	22 1/2” x 21 1/2”	19 1/2” x 21 1/2”
Number of doors	1	2
INTERNAL DIMENSIONAL DATA		
NET Capacity (cubic ft.) NET Capacity (Liters)	7.3 207	13.9 394
Internal Length Overall (inches) Internal Length Overall (mm)	23” 584	44” 1118
Internal Depth Overall (inches) Internal Depth Overall (mm)	18” 457	20” 508
Internal Height Overall (inches) Internal Height Overall (mm)	23” 584	23” 584
Number of shelves	2	4
ELECTRICAL DATA		
Full Load Amperes 115/60/1	6.0	7.0
ENERGY CONSUMPTION (KWH)	7.5	10.9
REFRIGERATION DATA		
Horsepower	1/4	1/3
WEIGHT DATA		
Gross Weight (Crated lbs)	180	245
Gross Weight (Crated kg)	82	111

PLAN VIEWS

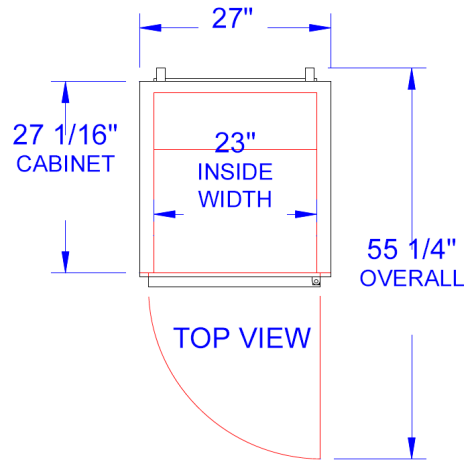

UCF27 TOP

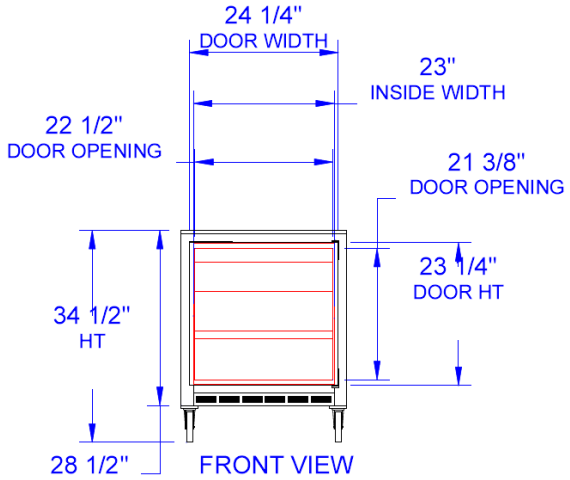

UCF27 FRONT

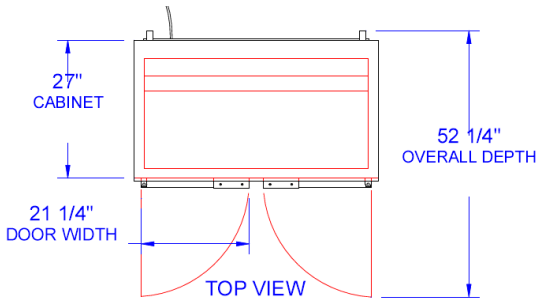

UCF48 TOP

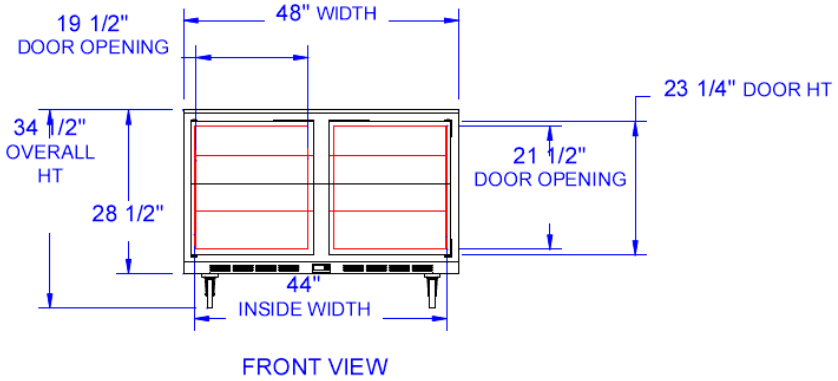

UCF48 FRONT

BEVERAGE-AIR® CORPORATION

3779 Champion Blvd. • Winston-Salem, NC 27105 USA • (336) 245-6400 • Fax (336) 245-6453 • (888) 845-9800 • www.beverage-air.com

Specifications are subject to change without prior notice. 06/10

Tundra Specialties