Item No. _____
Quantity _____

BEVERAGE-AIR

3779 Champion Blvd., Winston-Salem, NC 27105
1-888-845-9800 Fax# 1-336-245-6453
http://www.Beverage-Air.com

Commercial Refrigeration Equipment
General Specification

WORK TOP REFRIGERATORS
29" BASE MODEL SERIES

MODELS:
WTR27A
WTR48A
WTR60A
WTR72A

WTR SERIES WORKTOP UNITS
Versatile, compact (29" deep) models with stainless steel work tops and refrigerated storage of food products. Working height is 35 1/2."

CABINET CONSTRUCTION
Heavy duty construction includes stainless steel on front, sides, door(s) and grille. Stainless steel 2 1/2" thick worktop with 4" high removable backsplash. Cabinet back and bottom are galvanized steel. Interior liner is made of anodized aluminum for longer lasting corrosion protection. Interior thermometer is standard.

Cabinets are insulated with foamed-in-place polyurethane insulation of 2" minimum thickness. Doors are mounted to cabinet on self-closing, cartridge style hinges with 120° stay open feature. A plug-in type vinyl magnetic gasket is attached to each door for positive seal. Convenient, contoured, pull handle is made of black anodized aluminum. Interior arrangement includes 2 steel wire epoxy coated shelves behind each door, adjustable in 1/2 inch increments. Interior light with manual switch is provided with glass door models.

REFRIGERATION
Refrigeration system utilizes R134a refrigerant metered by a capillary tube system. Automatic (non-electric) condensate evaporator is standard. Interior forced air system, with high humidity evaporator coils, provides the ideal environment for food preservation.

ELECTRICAL
Units wired at factory and ready for connection to a 115/60/1 phase, 15 amp dedicated outlet. 8' long cord and plug set included.

SPECIAL FEATURES
- WTR48A has earned the ENERGY STAR®.
- Cartridge style door hinges provides positive seal & eliminates door sagging issues (excludes glass door and some special units).
- 6" casters, two with brakes standard.
- Optional 6" legs or 3" casters available

***Note**: Overall heights of casters may vary with different types of casters depending upon caster manufacturer designations.

WTR27

ENERGY STAR **WTR48**

WTR60

ELECTRICAL CONNECTION

115/60/1
NEMA-5-15P

Units pre-wired at factory and include 8' long cord and plug

Available From:

***Note**: Not all markings may apply to all model variations.

Model Specified	_____	**Store#**	_____
Location	_____	**Quantity**	_____

BEVERAGE-AIR

Standard Worktop Refrigerator Cabinets

Models: WTR27A, WTR48A, WTR60A, WTR72A

MODEL	WTR27A	WTR48A	WTR60A	WTR72A
EXTERNAL DIMENSIONAL DATA				
Length Overall (inches) Length Overall (mm)	27” 686	48” 1219	60” 1524	72” 1829
Depth Overall (inches) - Less handle Depth Overall (mm) - Less handle	29 1/4” 743	29 1/4” 743	29 1/4” 743	29 1/4” 743
Height Overall— on 6” casters (inches)* Height Overall—on 6” casters (mm)*	39 1/2” 1003	39 1/2” 1003	39 1/2” 1003	39 1/2” 1003
Depth with Door Open 90 °	55 1/4”	52 1/4”	53 13/16”	52 1/8”
Clear Door Opening (inches)	22 1/2” x 23 1/4”	19 1/2” x 21 1/2”	22 1/2” x 21 3/8”	19 1/2” x 21 1/2”
Number of doors	1	2	2	3
INTERNAL DIMENSIONAL DATA				
NET Capacity (cubic ft.) NET Capacity (Liters)	7.3 207	13.9 394	17.1 484	21.5 609
Internal Length Overall (inches) Internal Length Overall (mm)	23” 584	44” 1118	56” 1422	68” 1727
Internal Depth Overall (inches) Internal Depth Overall (mm)	20” 508	20” 508	24 7/8” 632	19 3/4” 502
Internal Height Overall (inches) Internal Height Overall (mm)	23” 584	23” 584	23” 584	22 3/4” 578
Number of shelves	2	4	4	6
ELECTRICAL DATA				
Full Load Amperes 115/60/1	4.0	3.3	8.2	8.2
ENERGY CONSUMPTION (KWH)	2.88	2.37	3.76	3.38
REFRIGERATION DATA				
Horsepower	1/6	1/5	1/4	1/4
WEIGHT DATA				
Gross Weight (Crated lbs)	161	235	265	305
Gross Weight (Crated kg)	73	107	120	138

***Note**: Overall heights of casters may vary with different types of casters depending upon caster manufacturer designations.

PLAN VIEWS

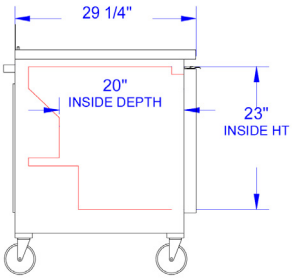

COMMON END

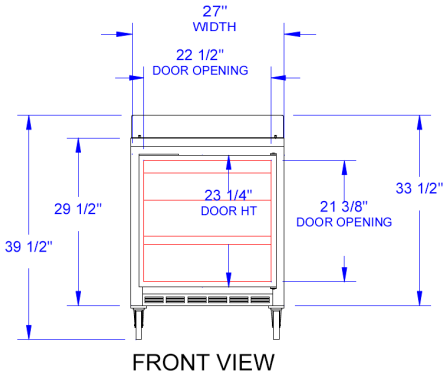

WTR27A

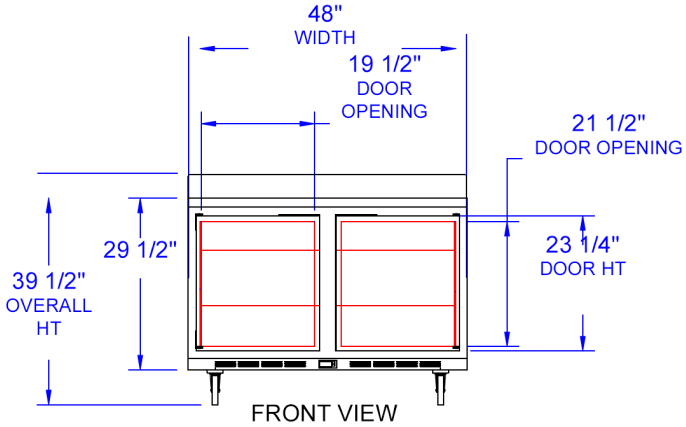

WTR48A

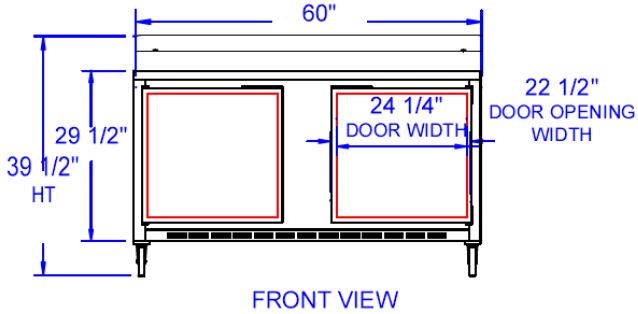

WTR60A

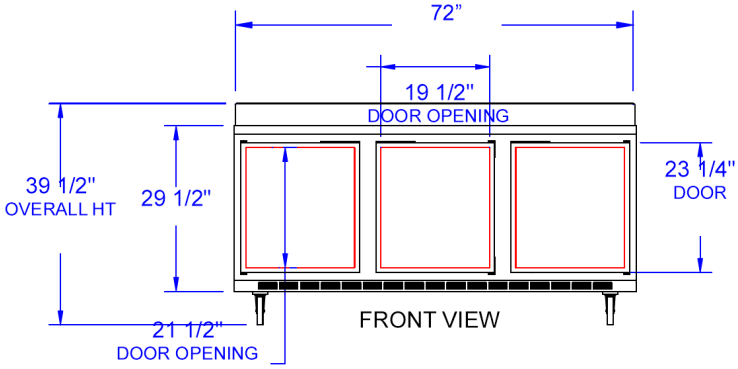

WTR72A

BEVERAGE-AIR® CORPORATION

3779 Champion Blvd. • Winston-Salem, NC 27105 USA • (336) 245-6400 • Fax (336) 245-6453 • (888) 845-9800 • www.beverage-air.com

Specifications are subject to change without prior notice. 06/10

Tundra Specialties