Item No. _____
Quantity _____

BEVERAGE-AIR

3779 Champion Blvd., Winston-Salem, NC 27105
1-888-845-9800 Fax# 1-336-245-6453
http://www.Beverage-Air.com

Commercial Refrigeration Equipment
General Specification

29" DEPTH WORKTOP FREEZER
FOOD PREPARATION SERIES

MODELS:
WTF27A
WTF48A

WTF—SERIES WORKTOP UNITS
Versatile, compact (29" deep) models with stainless steel work tops and frozen storage of food products. Working height* is 35 1/2".

CABINET CONSTRUCTION
Heavy duty construction includes stainless steel on front, sides, door(s) and grille. Worktop is stainless steel with 4" removable backsplash. Cabinet back and bottom are galvanized steel. Interior liner is made of anodized aluminum for longer lasting corrosion protection. Interior thermometer is standard.

Cabinets are insulated with foamed-in-place polyurethane insulation of 2" minimum thickness. Work tops are 2 1/2". Doors are mounted to cabinet on self-closing, cartridge style hinges with 120° stay open feature. Door openings include low wattage, anti-condensate heaters. A plug-in type vinyl magnetic gasket is attached to each door for positive seal. Convenient, contoured, pull handle is made of black anodized aluminum. Interior arrangement includes 2 steel wire epoxy coated shelves behind each door, adjustable in 1/2 inch increments.

REFRIGERATION
Forced air refrigeration systems use capillary tube to meter refrigerant. Temperatures are held at zero and below. Refrigerant used is R404A. Automatic defrost is standard. Automatic (non-electric) condensate evaporator is provided.

ELECTRICAL
Units wired at factory and ready for connection to a 115/60/1 phase, 15 amp dedicated outlet. 8' long cord and plug set included.

SPECIAL FEATURES
- Cartridge style door hinges provides positive seal & eliminates door sagging issues (excludes glass door and some special units).
- 6" casters, two with brakes standard.
- Optional 6" legs or 3" casters available

WTF27

WTF48

ELECTRICAL CONNECTION
Units pre-wired at factory and include 8' long cord and plug set.

115/60/1
NEMA-5-15P

***Note**: Overall heights of casters may vary with different types of casters depending upon caster manufacturer designations.

Available From:

Model Specified	_____	**Store#**	_____
Location	_____	**Quantity**	_____

BEVERAGE-AIR

Standard Worktop Freezer Cabinets

Models: WTF27A / WTF48A

MODEL	WTF27A	WTF48A
EXTERNAL DIMENSIONAL DATA		
Length Overall (inches) Length Overall (mm)	27” 686	48” 1219
Depth Overall (inches) - Less handle Depth Overall (mm) - Less handle	29 1/4” 743	29 1/4” 743
Height Overall— on 6” casters (inches)* Height Overall—on 6” casters (mm)*	39 1/2” 1003	39 1/2” 1003
Depth with Door Open 90 °	53 3/4”	52 1/4”
Clear Door Opening (inches)	22 1/2” x 23 1/4”	19 1/2” x 21 1/2”
Number of doors	1	2
INTERNAL DIMENSIONAL DATA		
NET Capacity (cubic ft.) NET Capacity (Liters)	7.3 207	13.9 394
Internal Length Overall (inches) Internal Length Overall (mm)	23” 584	44” 1118
Internal Depth Overall (inches) Internal Depth Overall (mm)	25” 635	20” 508
Internal Height Overall (inches) Internal Height Overall (mm)	23” 584	23” 584
Number of shelves	2	4
ELECTRICAL DATA		
Full Load Amperes 115/60/1	6.0	7.0
ENERGY CONSUMPTION (KWH)	7.5	10.9
REFRIGERATION DATA		
Horsepower	1/4	1/3
WEIGHT DATA		
Gross Weight (Crated lbs)	166	246
Gross Weight (Crated kg)	75	112

***Note**: Overall heights of casters may vary with different types of casters depending upon caster manufacturer designations.

PLAN VIEWS

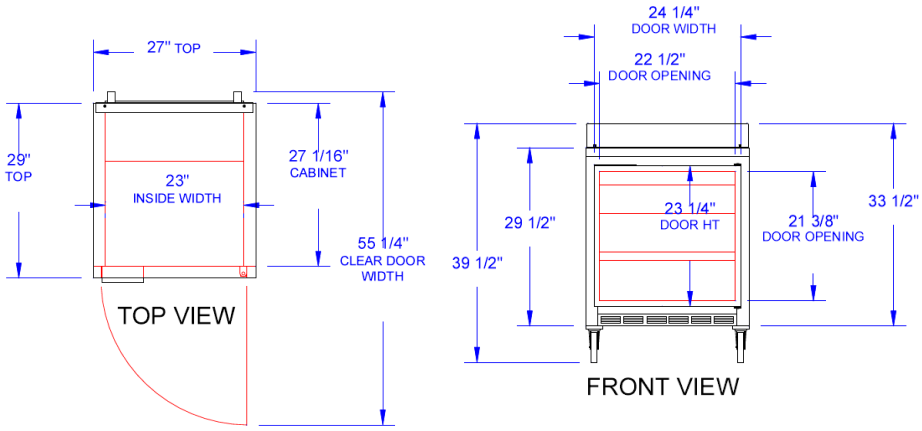

WTF27A

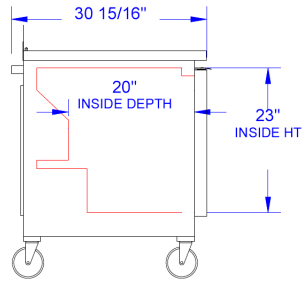

WTF48A

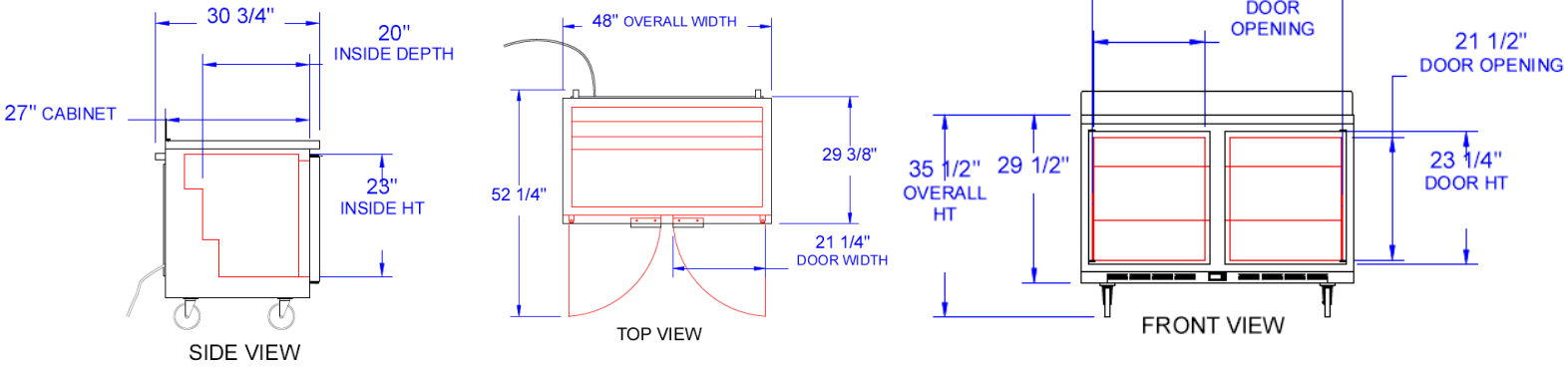

BEVERAGE-AIR® CORPORATION

3779 Champion Blvd. • Winston-Salem, NC 27105 USA • (336) 245-6400 • Fax (336) 245-6453 • (888) 845-9800 • www.beverage-air.com

Specifications are subject to change without prior notice. 06/10

Tundra Specialties