Item No. _____
Quantity _____

BEVERAGE-AIR

3779 Champion Blvd., Winston-Salem, NC 27105
1-888-845-9800 Fax# 1-336-245-6453
http://www.Beverage-Air.com

Commercial Refrigeration Equipment
General Specification

DEEP & SHALLOW WELL HORIZONTAL COOLERS
DW/SF SERIES

MODELS:
DW49
DW64
DW79
DW94
SF34

DEEP & SHALLOW WELL— HORIZONTAL BOTTLE COOLERS
Deep Well horizontal coolers include 4 (four) self-contained models in widths of 50”, 65”, 80” and 95”. One shallow well model (SF34) is available in width of 35”.

CABINET CONSTRUCTION
Exteriors of both deep well and shallow well models include attractive, wear-resistant vinyl on steel in black finish. Stainless steel options are available.

Bottle cap opener and cap catcher is standard with all models.

Tops of both deep well and shallow well models include easy glide, stainless steel lids and stainless steel counter top with integral glass stops. Optional glass lids, when specified, come with interior lighting. Lid locks are optionally available.

Standard interior metal is galvanized steel. Stainless steel interior is optionally available. Adjustable dividers included are epoxy coated steel wire.

Environmentally friendly foamed-in-place CFC and HCFC-free polyurethane insulation enhances the structural strength of the cabinet and helps increase energy efficiency.

REFRIGERATION
Forced air refrigeration systems provide ample capacity to chill and hold products between 32°F and 38°F. Refrigerant R134a used in systems is CFC and HCFC-free for compliance to environmental safety concerns. Condensate elimination is automatic and non-electric.

ELECTRICAL
Units wired at factory and ready for connection to a 115/60/1 phase, 15 amp dedicated outlet. 8’ long cord and plug set included.

DW49-B

DW64-B

DW79-B

DW94-B

*Note: Not all markings may apply to all model variations.

Available From:

Model Specified	_____	**Store#**	_____
Location	_____	**Quantity**	_____

BEVERAGE-AIR

ELECTRICAL CONNECTION

Units pre-wired at factory and include 8' long cord and plug set.

115/60/1
NEMA-5-15P

Deep & Shallow Well Horizontal Bottle Coolers

Models: DW49, DW64, DW79, DW94, SF34

MODEL	DW49	DW64	DW79	DW94	SF34
EXTERNAL DIMENSIONAL DATA					
Length Overall (inches) Length Overall (mm)	50" 1270	65" 1651	80" 2032	95" 2413	35" 889
Depth Overall (inches) Depth Overall (mm)	26 1/2" 673	26 1/2" 673	26 1/2" 673	26 1/2" 673	26 1/2" 673
Height Overall— (inches) Height Overall—(mm)	33 7/8" 860	33 7/8" 860	33 7/8" 860	33 7/8" 860	33 7/8" 860
Number of lids	2	2	3	4	1
INTERNAL DIMENSIONAL DATA					
NET Capacity (cubic ft.) NET Capacity (Liters)	13.3 377	18.5 524	24.1 682	28.5 807	7.5 212
Internal Length Overall (inches) Internal Length Overall (mm)	46" 1168	61" 1549	76" 1930	91" 2311	31" 787
Internal Depth Overall (inches) Internal Depth Overall (mm)	22 1/2" 572	22 1/2" 572	22 1/2" 572	22 1/2" 572	22 1/2" 572
Internal Height Overall (inches) Internal Height Overall (mm)	27" 686	27" 686	27" 686	27" 686	18 1/2" 470
Number of dividers	3	4	5	6	2
12 oz. bottle capacity	17 1/2 cases	25 1/4 cases	32 cases	39 cases	9 1/3 cases
12 oz. can capacity	23 3/4 cases	34 3/4 cases	45 3/4 cases	55 3/4 cases	11 1/2 cases
ELECTRICAL DATA					
Full Load Amperes 115/60/1	6.3	6.3	9.5	9.5	4.5
ENERGY CONSUMPTION (KWH)	3.0	3.52	3.77	4.32	4.4
REFRIGERATION DATA					
Horsepower	1/3	1/3	1/2	1/2	1/5
WEIGHT DATA					
Gross Weight (Crated lbs)	378	331	388	468	214
Gross Weight (Crated kg)	172	150	176	212	97

PLAN VIEWS

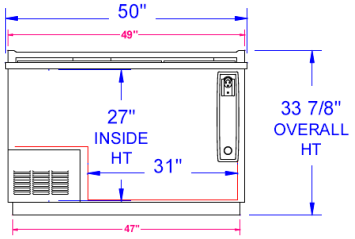

DW49 FRONT

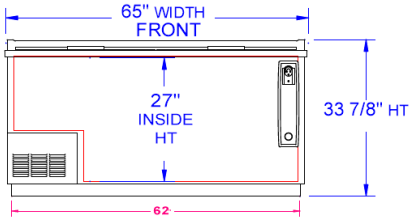

DW64 FRONT

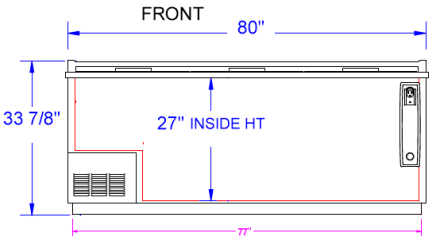

DW79 FRONT

*Note: Not all markings may apply to all model variations.

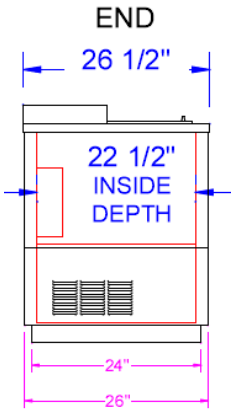

COMMON END

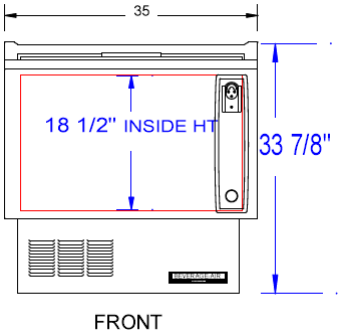

SF34 FRONT

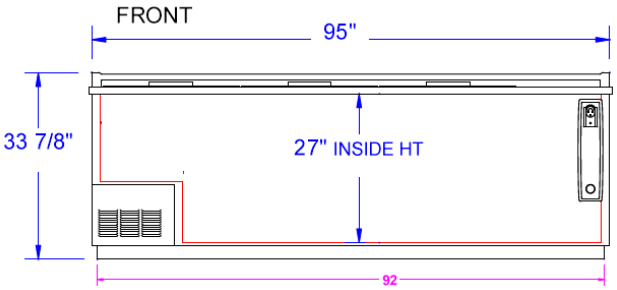

DW94 FRONT

BEVERAGE-AIR® CORPORATION

3779 Champion Blvd. • Winston-Salem, NC 27105 USA • (336) 245-6400 • Fax (336) 245-6453 • (888) 845-9800 • www.beverage-air.com

Specifications are subject to change without prior notice. 06/10

Tundra Specialties