Item No. _____
Quantity _____

BEVERAGE-AIR

3779 Champion Blvd., Winston-Salem, NC 27105
1-888-845-9800 Fax# 1-336-245-6453
http://www.Beverage-Air.com

Commercial Refrigeration Equipment
General Specification

DRAFT BEER EQUIPMENT BARMOBILE PORTABLE DRAFT BEER DISPENSERS

BM SERIES

MODELS:
BM23
BM23C

BM23 SERIES—BARMOBILE BEER DISPENSER

The BM23 and its companion club top model BM23C provide mobility with application (home, club, hospitality). With full keg capacity and heavy-duty, forced air refrigeration, beer is dispensed ice cold every time.

CABINET CONSTRUCTION

Standard construction includes wear resistant, black vinyl on steel exteriors. Stainless finish options available.

Top is made of heavy-duty stainless steel including drip dray for easy cleaning. Glass rail is standard on club top model. Club top model features glass storage area below an easy glide, stainless steel lid. Four-inch (4”) heavy-duty swivel casters are standard.

Three-inch (3”) insulated tower with single faucet is included with the BM23. BM23C club top model includes 2 1/2” insulated tower with single faucet. Each tower is adapted to have a continuous source of cold air channeled into it to keep beer at its coldest, best quality when dispensed.

Inside construction utilizes galvanized steel for walls and ceiling. Reinforced floors and doorsill are made from heavy-duty stainless steel to provide lasting service. Door with lock standard. Magnetic gasket provides positive door sealing.

Cabinet insulation is foamed-in-place polyurethane (CFC free) which helps to provide maximum operating efficiency and strengthen the overall construction.

Includes beer waste bottle to capture beer from drain.

REFRIGERATION

CFC-free R134a refrigerant used in Barmobiles to comply with all environmental concerns.

ELECTRICAL

Units wired at factory and ready for connection to a 115/60/1 phase, 15 amp dedicated outlet. 8’ long cord and plug set included.

SPECIAL FEATURES

- BM23 models have earned the ENERGY STAR®
- BM23C club top model features glass storage area
- Stainless finish options available
- Beer waste bottle to capture beer from drain

BM23

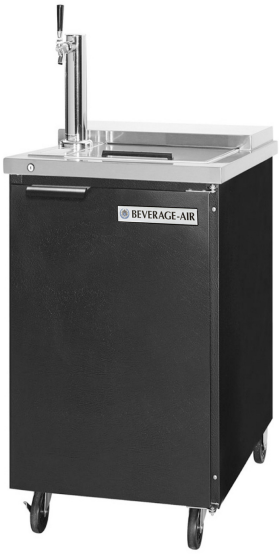

BM23C

BM23 (Stainless Exterior)

***Note**: Overall heights of casters may vary with different types of casters depending upon caster manufacturer designations.

Available From:

Model Specified	_____	**Store#**	_____
Location	_____	**Quantity**	_____

BEVERAGE-AIR

Barmobile
Models: BM23, BM23C

MODEL	BM23	BM23C
EXTERNAL DIMENSIONAL DATA		
Length Overall (inches) Length Overall (mm)	24” 610	24” 610
Depth Overall (inches) Depth Overall (mm)	29 1/2” 749	29 1/2” 749
Height Overall— on casters (inches)* Height Overall—on casters (mm)*	39” 991	39” 991
Clear Door Opening (inches)	14 5/8” x 8 1/2”	14 5/8” x 8 1/2”
Depth With Door Open 90°	48”	48”
Number of doors	1	1
INTERNAL DIMENSIONAL DATA		
NET Capacity (cubic ft.) NET Capacity (Liters)	7.8 221	7.8 221
Internal Length Overall (inches) Internal Length Overall (mm)	19” 483	20” 508
Internal Depth Overall (inches) Internal Depth Overall (mm)	23 3/4” 603	23 3/4” 603
Internal Height Overall (inches) Internal Height Overall (mm)	29 1/2” 749	29 1/2” 749
Number of Kegs (straight wall)	1	1
ELECTRICAL DATA		
Full Load Amperes 115/60/1	4	4
ENERGY CONSUMPTION (KWH)	1.85	1.85
REFRIGERATION DATA		
Horsepower	1/5	1/5
WEIGHT DATA		
Gross Weight (Crated lbs)	180	186
Gross Weight (Crated kg)	82	84

***Note**: Overall heights of casters may vary with different types of casters depending upon caster manufacturer designations.

PLAN VIEWS

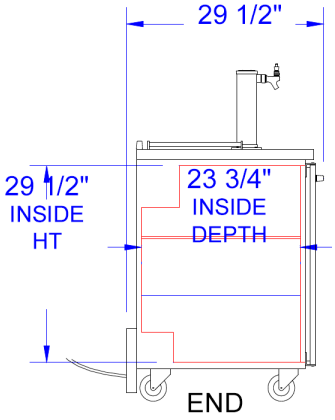

COMMON END VIEW

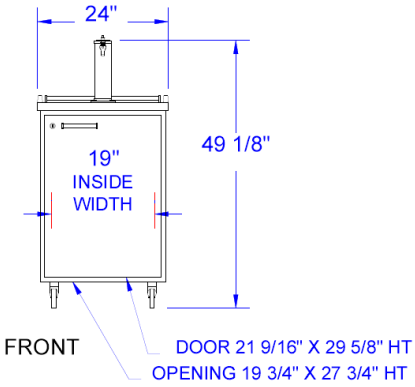

BM23 FRONT

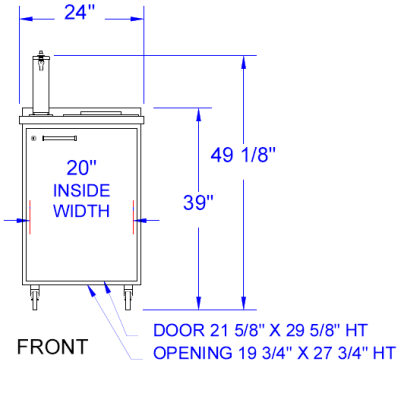

BM23C FRONT

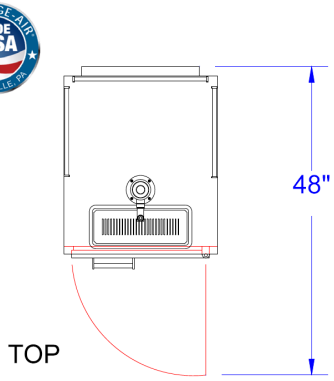

BM23 TOP

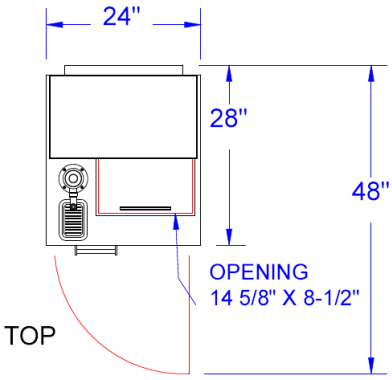

BM23C TOP

ELECTRICAL CONNECTION
Units pre-wired at factory and include 8’ long cord and plug set.

115/60/1
NEMA-5-15P

BEVERAGE-AIR® CORPORATION
3779 Champion Blvd. • Winston-Salem, NC 27105 USA • (336) 245-6400 • Fax (336) 245-6453 • (888) 845-9800 • www.beverage-air.com

Specifications are subject to change without prior notice. 07/10
Tundra Specialties