Item No. _____
Quantity _____

BEVERAGE-AIR

3779 Champion Blvd., Winston-Salem, NC 27105
1-888-845-9800 Fax# 1-336-245-6453
http://www.Beverage-Air.com

SCHOOL MILK COOLERS
DUAL ACCESS, FORCED-AIR
STF SERIES

MODELS:
STF49
STF58

Commercial Refrigeration Equipment
General Specification

STF SERIES—DUAL ACCESS, FORCED-AIR
Dual-access, Twin top, forced-air milk coolers are designed to hold milk between 36°F to 38°F until ready to serve. Produced in two sizes to hold 12 and 16 milk cases (13” x 13” x 11”) per unit. Units will also accommodate (19” x 13” x 11”) milk cases.

CABINET CONSTRUCTION
Standard construction includes the lid, door, adjustable hinges, and door latches made from stainless steel. Balance of exterior is white finish on steel. One-piece, reinforced stainless steel floor for maximum milk crate support. Balance of interior is galvanized steel. Heavy-duty, epoxy coated steel wire floor racks are provided for added floor protection. Floor drain is centrally located for easy cleaning, connecting to drain hose with hose adapter.

Doors are fitted with flexible compression gaskets to ensure tight seal. All steel construction with 3-screw hinges add to model durability. Self-latching doors provide added convenience with safety bumpers standard.

Digital exterior thermometer, cylinder lock, bottom drain, latch safety bumpers and swivel casters (2 with locks) are provided as standard.

Foamed-in-place CFC and HCFC-free polyurethane insulation enhances the structural strength of the cabinet and helps increase energy efficiency. This insulation helps to prevent liquid penetration that results in foul odors. Overall depth of 33 1/2” allows easy mobility and clear passage through most doorways.

Models are also offered with stainless steel exterior in place of white finish on steel. A stainless steel interior is optionally available. Additional options include wrap around and corner bumpers.

REFRIGERATION
Refrigeration system uses R134a refrigerant, which is CFC and HCFC-free for compliance with environmental safety concerns. Dual evaporator evens airflow throughout coolers, completely enveloping contents in a blanket of cold air.

ELECTRICAL
Units wired at factory and ready for connection to a 115/60/1 phase, 15 amp dedicated outlet. 8’ long cord and plug set included.

SPECIAL FEATURES
- One-piece, reinforced stainless steel floor for maximum support of milk crates.
- Stainless options available.

STF49 **(white exterior shown)**

STF58 **(stainless exterior shown)**

ELECTRICAL CONNECTION

115/60/1
NEMA-5-15P

Units pre-wired at factory and include 8’ long cord and plug set.

***Note**: Not all markings may apply to all model variations.

Available From:

Model Specified	_____	**Store#**	_____
Location	_____	**Quantity**	_____

BEVERAGE-AIR

STF SERIES School Milk Coolers
Models: STF49, STF58

MODEL	STF49	STF58
EXTERNAL DIMENSIONAL DATA		
Length Overall (inches) Length Overall (mm)	49” 1245	58” 1473
Depth Overall (inches) Depth Overall (mm)	34 3/16” 868	34 3/16” 868
Height Overall— (inches) Height Overall—(mm)	48” 1219	48” 1219
Number of doors/lids	4	4
INTERNAL DIMENSIONAL DATA		
NET Capacity (cubic ft.) NET Capacity (Liters)	20.5 581	24.5 694
CASE CAPACITIES		
13” x 13” x 11”	12	16
19” x 13” x 11”	8	10
ELECTRICAL DATA		
Full Load Amperes 115/60/1	10.1	10.1
ENERGY CONSUMPTION (KWH)	8.35	5.65
REFRIGERATION DATA		
Horsepower	1/2	1/2
WEIGHT DATA		
Gross Weight (Crated lbs)	315	463
Gross Weight (Crated kg)	143	210

***Note**: Not all markings may apply to all model variations.

PLAN VIEWS

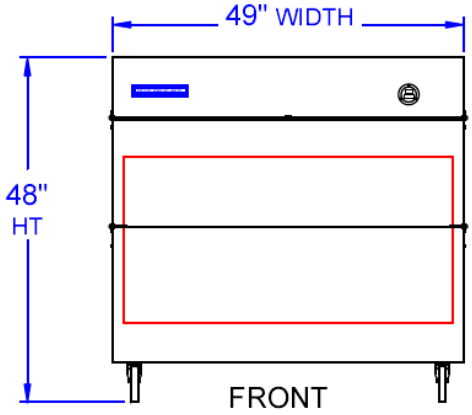

STF49

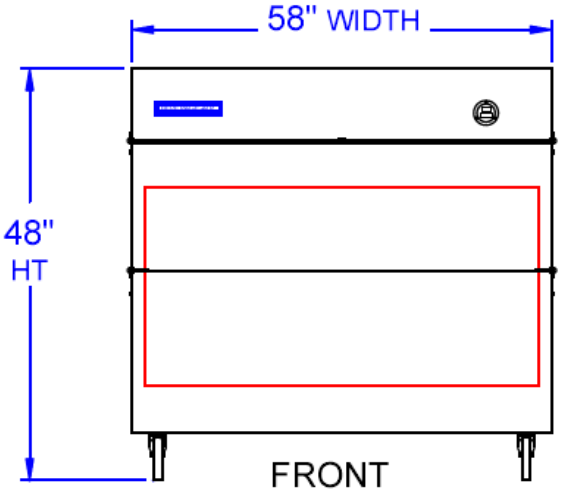

STF58

ELECTRICAL CONNECTION
Units pre-wired at factory and include 8’ long cord and plug set.

115/60/1
NEMA-5-15P

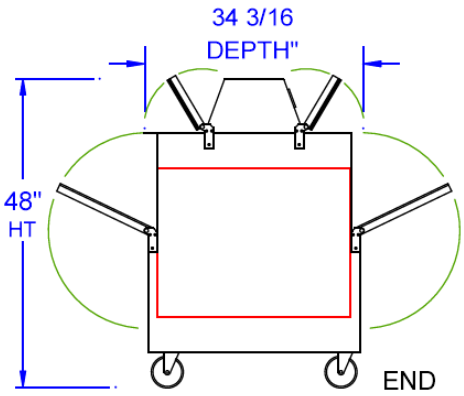

BEVERAGE-AIR® CORPORATION
3779 Champion Blvd. • Winston-Salem, NC 27105 USA • (336) 245-6400 • Fax (336) 245-6453 • (888) 845-9800 • www.beverage-air.com

Specifications are subject to change without prior notice. 08/10
Tundra Specialties