Item No. _____
Quantity _____

BEVERAGE-AIR

3779 Champion Blvd., Winston-Salem, NC 27105
1-888-845-9800 Fax# 1-336-245-6453
http://www.Beverage-Air.com

Commercial Refrigeration Equipment
General Specification

SCHOOL MILK COOLERS
DUAL ACCESS, COLD WALL
ST SERIES

MODELS:
ST34N
ST49N
ST58N

ST SERIES—DUAL ACCESS, COLD WALL
Dual access, cold wall milk coolers are designed to hold milk between 36°F to 38°F until ready to serve. Produced in three sizes to hold 8, 12, and 16 milk cases (13” x 13” x 11”) per unit.

CABINET CONSTRUCTION
Standard construction includes the lid, door, adjustable hinges, and door latches made from stainless steel. Balance of exterior is white finish on steel. One-piece, reinforced stainless steel floor for maximum milk crate support. Balance of interior is galvanized steel. Heavy-duty, epoxy coated steel wire floor racks are provided for added floor protection. Floor drain is centrally located for easy cleaning, connecting to drain hose with hose adapter.

Exterior thermometer, cylinder lock, bottom drain, and 4” swivel casters (2 with locks) are provided as standard.

Foamed-in-place CFC and HCFC-free polyurethane insulation enhances the structural strength of the cabinet and helps increase energy efficiency. This insulation helps to prevent liquid penetration that results in foul odors. Overall depth of 31 1/2” allows easy mobility and clear passage through most doorways.

Models are also offered with stainless steel exterior in place of white finish on steel. A stainless steel interior is optionally available. Additional options include wrap around and corner bumpers.

REFRIGERATION
Refrigeration system uses R404A refrigerant, which is CFC and HCFC-free for compliance with environmental safety concerns.

ELECTRICAL
Units wired at factory and ready for connection to a 115/60/1 phase, 15 amp dedicated outlet. 8’ long cord and plug set included.

SPECIAL FEATURES
- One-piece, reinforced stainless steel floor for maximum support of milk crates.
- ST34N & ST49N models have earned the ENERGY STAR®.
- Stainless options available.

ENERGY STAR **ST34N** **(white exterior shown)**

ENERGY STAR **ST49N** **(white exterior shown)**

ELECTRICAL CONNECTION

115/60/1
NEMA-5-15P

Units pre-wired at factory and include 8’ long cord and plug set.

*Note: Not all markings may apply to all model variations.

Available From:

Model Specified	_____	**Store#**	_____
Location	_____	**Quantity**	_____

BEVERAGE-AIR

ST SERIES School Milk Coolers
Models: ST34N, ST49N, ST58N

MODEL	ST34N	ST49N	ST58N
EXTERNAL DIMENSIONAL DATA			
Length Overall (inches) Length Overall (mm)	34” 864	49” 1245	58” 1473
Depth Overall (inches) Depth Overall (mm)	31 1/2” 800	31 1/2” 800	31 1/2” 800
Height Overall— (inches) Height Overall—(mm)	39 1/2” 1003	39 1/2” 1003	39 1/2” 1003
Number of doors/lids	4	4	4
INTERNAL DIMENSIONAL DATA			
NET Capacity (cubic ft.) NET Capacity (Liters)	13.6 385	20 566	24 679
CASE CAPACITIES			
13” x 13” x 11”	8	12	16
19” x 13” x 11”	4	8	10
ELECTRICAL DATA			
Full Load Amperes 115/60/1	4	7.5	7.5
ENERGY CONSUMPTION (KWH)	1.85	2.2	3.45
REFRIGERATION DATA			
Horsepower	1/4	1/4	1/3
WEIGHT DATA			
Gross Weight (Crated lbs)	240	291	393
Gross Weight (Crated kg)	109	132	178

***Note**: Not all markings may apply to all model variations.

PLAN VIEWS

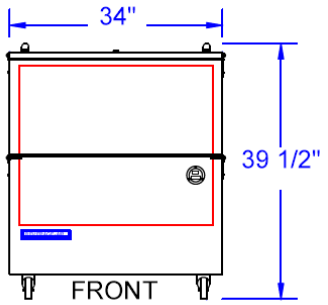

ST34N

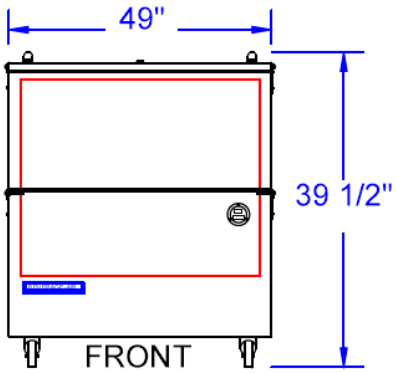

ST49N

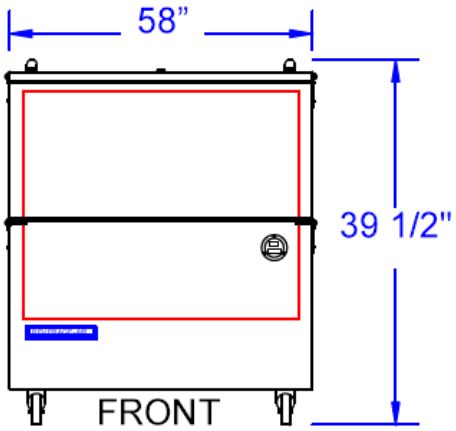

ST58N

ELECTRICAL CONNECTION

Units pre-wired at factory and include 8’ long cord and plug set.

115/60/1
NEMA-5-15P

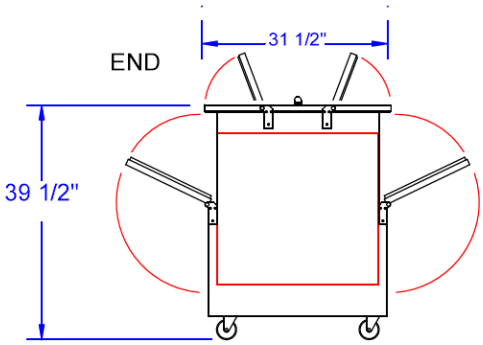

BEVERAGE-AIR® CORPORATION

3779 Champion Blvd. • Winston-Salem, NC 27105 USA • (336) 245-6400 • Fax (336) 245-6453 • (888) 845-9800 • www.beverage-air.com

Specifications are subject to change without prior notice. 08/10

Tundra Specialties