Item No. _____
Quantity _____

BEVERAGE-AIR

3779 Champion Blvd., Winston-Salem, NC 27105
1-888-845-9800 Fax# 1-336-245-6453
http://www.Beverage-Air.com

MIX & BULK MILK STORAGE
MS SERIES

MODELS:
MS58
MS68

Commercial Refrigeration Equipment
General Specification

MS SERIES—MIX & BULK MILK STORAGE
Available in 58” and 68” width. Units are ideal for storing mix and bulk milk.

CABINET CONSTRUCTION
Standard, cabinet exterior is constructed of heavy-duty white coated steel. Stainless exterior options available. Equipped with 2” stainless steel top. Doors are self-closing and include key locks. Magnetic door gaskets provide positive door sealing. Doors are field reversible with hinge kit accessory.

Standard interior construction utilizes galvanized steel walls and ceiling. Reinforced floor and doorsills are made from heavy-duty stainless steel to provide long lasting service.

Interior, incandescent, lighting is standard with manual on/off switch.

Foamed-in-place CFC and HCFC-free polyurethane insulation enhances the structural strength of the cabinet and helps increase energy efficiency.

REFRIGERATION
Lift-out refrigeration system uses R134a refrigerant, which is CFC and HCFC-free for compliance with environmental safety concerns.

Condensate elimination is automatic and non-electric.

ELECTRICAL
Units wired at factory and ready for connection to a 115/60/1 phase, 15 amp dedicated outlet. 8’ long cord and plug set included.

SPECIAL FEATURES
- Three sizes of syrup rails available (optional)
  3 jar rail: 15 5/8” W x 8 3/8” D x 10 19/32” H
  6 jar rail: 29 13/32” W x 8 3/8” D x 10 19/32” H
  9 jar rail: 43 3/16” W x 8 3/8” D x 10 19/32” H
- Six fruit jar inserts available (optional)

MS58 **(white exterior shown)**

MS68 **(white exterior shown)**

ELECTRICAL CONNECTION

115/60/1
NEMA-5-15P

Units pre-wired at factory and include 8’ long cord and plug set.

*Note: Not all markings may apply to all model variations.

Available From:

Model Specified	_____	**Store#**	_____
Location	_____	**Quantity**	_____

BEVERAGE-AIR

Mix & Bulk Milk Storage
Models: MS58, MS68

MODEL	MS58	MS68
EXTERNAL DIMENSIONAL DATA		
Length Overall (inches) Length Overall (mm)	59” 1499	69” 1753
Depth Overall (inches) Depth Overall (mm)	28 3/16” 716	28 3/16” 716
Height Overall— (inches) Height Overall—(mm)	37 1/4” 946	37 1/4” 946
Clear Door Width (inches)	21” x 29 15/16”	21” x 29 15/16”
Depth With Door Open 90°	50 1/2”	50 1/2”
Number of doors	2	2
INTERNAL DIMENSIONAL DATA		
NET Capacity (cubic ft.) NET Capacity (Liters)	23.8 674	28.4 804
Internal Length Overall (inches) Internal Length Overall (mm)	55” 1397	65” 1651
Internal Depth Overall (inches) Internal Depth Overall (mm)	23” 584	23” 584
Internal Height Overall (inches) Internal Height Overall (mm)	32” 813	32” 813
Number of Shelves	4	4
ELECTRICAL DATA		
Full Load Amperes 115/60/1	7.2	7.2
ENERGY CONSUMPTION (KWH)	4.37	3.55
REFRIGERATION DATA		
Horsepower	1/3	1/3
WEIGHT DATA		
Gross Weight (Crated lbs)	360	390
Gross Weight (Crated kg)	163	177

***Note**: Not all markings may apply to all model variations.

PLAN VIEWS

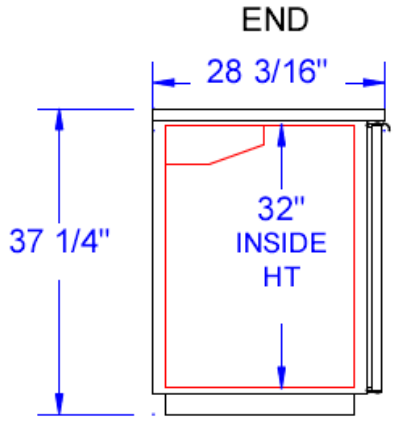

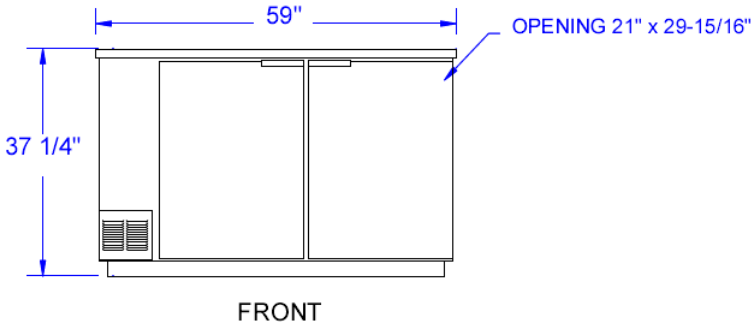

MS58

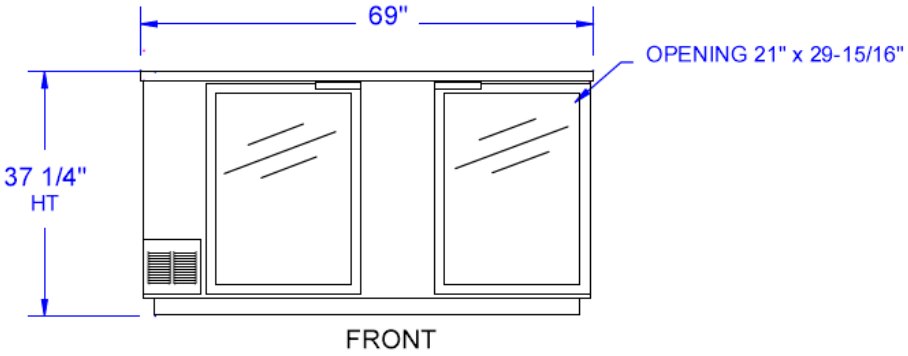

MS68

ELECTRICAL CONNECTION

Units pre-wired at factory and include 8’ long cord and plug set.

115/60/1
NEMA-5-15P

BEVERAGE-AIR® CORPORATION

3779 Champion Blvd. • Winston-Salem, NC 27105 USA • (336) 245-6400 • Fax (336) 245-6453 • (888) 845-9800 • www.beverage-air.com

Specifications are subject to change without prior notice. 06/10

Tundra Specialties