Item No. _____
Quantity _____

BEVERAGE-AIR

3779 Champion Blvd., Winston-Salem, NC 27105
1-888-845-9800 Fax# 1-336-245-6453
http://www.Beverage-Air.com

Commercial Refrigeration Equipment
General Specification

BUNKERS
FROZEN NOVELTY FREEZERS
SLANT TOP SERIES

MODELS:
NC27-1-W
NC33-1-W
NC41-1-W
NC49-1-W

NC SERIES—SLANT TOP NOVELTY CASE
Used for merchandising and storage of frozen food and novelty ice creams.

SPECIAL FEATURES
- **Class 4+ performance (95°F/70% R.H.)**
- **Low energy consumption**
- **Adjustable thermostat**
- **Operating temperature of 0°F.**
- **Angle top design with Low-e tempered glass lids**
- **Lids are easily removable.**
- **Maintenance free pre condenser**
- **Prepainted steel cabinet with injected CFC-free foam insulation**
- **Dual cap tube design**
- **Static skin condenser**
- **Round exterior edges**
- **Accessories included: thermometer, baskets and divider, lid lock and keys, high quality heavy duty casters, drain plug for easy cleaning**
- **Accessories available: 2 Ring Tub (Part # 2RINGTUB)**

NC27-1-W

ELECTRICAL CONNECTION
Units pre-wired at factory and include cord and plug set.

115/60/1
NEMA-5-15P

NC33-1-W

NC41-1-W

NC49-1-W

***Note**: Overall heights of casters may vary with different types of casters depending upon caster manufacturer designations.

Intertek Intertek 5 YEAR COMPRESSOR WARRANTY USA

Note: Not all markings may apply to all model variations.

Available From:

Model Specified	_____	**Store#**	_____
Location	_____	**Quantity**	_____

BEVERAGE-AIR

Bunkers Frozen Novelty Freezers
Models: NC27-1-W, NC33-1-W, NC41-1-W, NC49-1-W

MODEL	NC27-1-W	NC33-1-W	NC41-1-W	NC49-1-W
EXTERNAL DIMENSIONAL DATA				
Length Overall (inches) Length Overall (mm)	27” 686	33” 838	41” 1041	49” 1245
Depth Overall (inches) Depth Overall (mm)	25” 635	25” 635	25” 635	25” 635
Height Rear— (inches) Height Rear— (mm)	36” 914	36” 914	36” 914	36” 914
Height Front— (inches) Height Front— (mm)	31 3/4” 807	31 3/4” 807	31 3/4” 807	31 3/4” 807
Number of sliding lids	2	2	2	2
INTERNAL DIMENSIONAL DATA				
NET Capacity (cubic ft.) NET Capacity (Liters)	4.7 133	5.7 161	8.7 246	10.9 309
Number of baskets	3	3	4	5
ELECTRICAL DATA				
Electrical input	120 V	120 V	120 V	120 V
Amps	2.0	4.8	4.8	5.2
REFRIGERATION DATA				
Horsepower	1/5	1/4	1/4	1/3
WEIGHT DATA				
Weight (lbs)	142	145	180	200
Weight (kg)	64	66	82	91
Truckload Qty.—53’ Truck	126	88	84	72

PLAN VIEWS

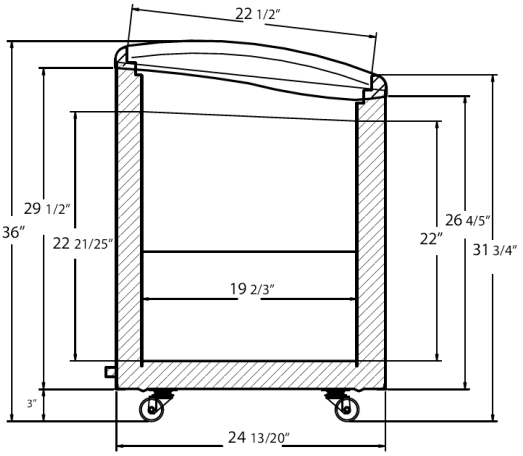

COMMON END VIEW

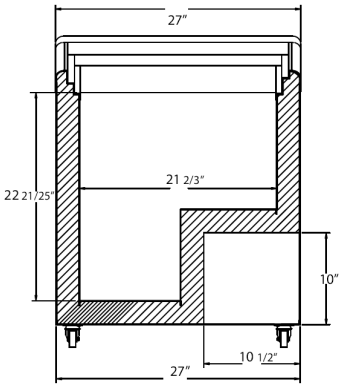

NC27 FRONT VIEW

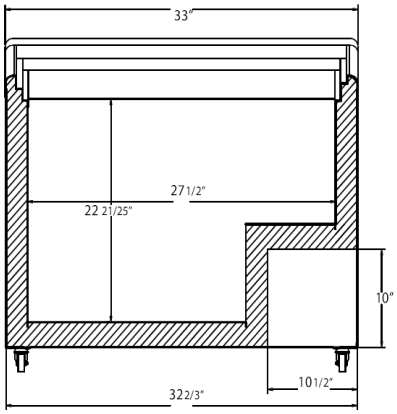

NC33 FRONT VIEW

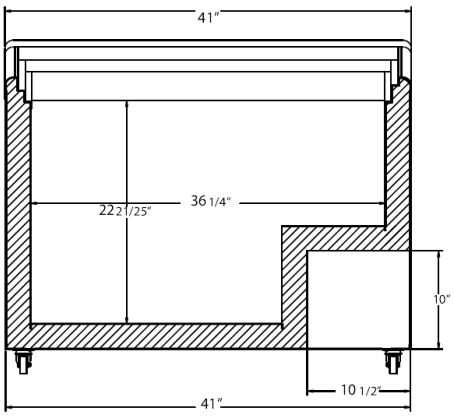

NC41 FRONT VIEW

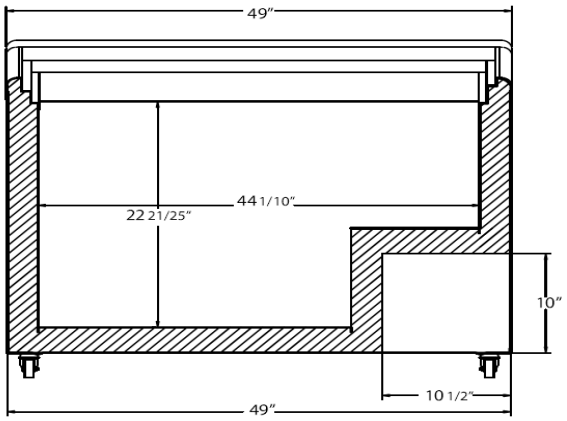

NC49 FRONT VIEW

BEVERAGE-AIR® CORPORATION

3779 Champion Blvd. • Winston-Salem, NC 27105 USA • (336) 245-6400 • Fax (336) 245-6453 • (888) 845-9800 • www.beverage-air.com

Specifications are subject to change without prior notice. 06/10

Tundra Specialties