Item No. _____
Quantity _____

BEVERAGE-AIR

3779 Champion Blvd., Winston-Salem, NC 27105
1-888-845-9800 Fax# 1-336-245-6453
http://www.Beverage-Air.com

Commercial Refrigeration Equipment
General Specification

HINGED GLASS DOOR LUMAVUE MERCHANDISER SERIES
LV10

MODEL:
LV10

LUMAVUE SERIES—GLASS DOOR MERCHANDISER
Used for merchandising and storage of product.

CABINET CONSTRUCTION
Heavy duty construction includes white coated steel interior walls. Exterior finish is heavy-duty steel with a baked on durable coating. Choose from black or white finish.

Foamed-in-place CFC and HCFC-free polyurethane insulation enhances the structural strength of the cabinet and helps increase energy efficiency.

Modern, one-piece grille is easily removed for cleaning and servicing.

Double pane, lowE argon filled glass door features inside and outside panes that are tempered for added safety.

Self-closing, hinged glass door features recessed, pocket door handle provides low profile and is more aesthetically pleasing. Door provides automatic hold-open feature.

Three white epoxy coated steel shelves are standard.

REFRIGERATION
Whisper-quiet refrigeration system uses R134a refrigerant, which is CFC and HCFC-free for compliance with environmental safety concerns.

Product temperatures from 32°F to 40°F.

ELECTRICAL
Interior fluorescent lighting enhances product illumination. Optional LED lighting provides hidden light source for increased product visibility. LED bulbs last up to 10 times longer compared to fluorescent bulbs and renders additional energy savings due to reduced wattage load on compressor.

Units wired at factory and ready for connection to a 115/60/1 phase, 15 amp dedicated outlet. 8' long cord and plug set included.

ELECTRICAL CONNECTION
Units pre-wired at factory and include 8' long cord and plug set.

115/60/1
NEMA-5-15P

LV10
(shown with optional fourth shelf)

SPECIAL FEATURES
- Whisper-quiet refrigeration system
- Recessed, pocket door handle
- Optional LED lighting
- 2010 Federal Energy Compliant
- Gravity Flo kits and Can Roller options available

*Note: Not all markings may apply to all model variations.

Available From:

Model Specified	_____	**Store#**	_____
Location	_____	**Quantity**	_____

BEVERAGE-AIR

LumaVue Glass Door Merchandisers
Model: LV10

MODEL	LV10
EXTERNAL DIMENSIONAL DATA	
Length Overall (inches) Length Overall (mm)	24” 610
Depth Overall (inches) Depth Overall (mm)	26” 660
Height Overall— (inches) Height Overall— (mm)	54” 1372
Number of doors	1
Depth with Door Open 90 °	n/a*
INTERNAL DIMENSIONAL DATA	
NET Capacity (cubic ft.) NET Capacity (Liters)	10 283
Internal Length Overall (inches) Internal Length Overall (mm)	21” 533
Internal Depth Overall (inches) Internal Depth Overall (mm)	20 3/4” 527
Internal Height Overall—(inches) Internal Height Overall—(mm)	37 3/4” 959
Number of shelves	3
ELECTRICAL DATA	
Full Load Amperes 115/60/1	5.0 A
ENERGY CONSUMPTION	3.1 kWh/Day
REFRIGERATION DATA	
Horsepower	1/5
WEIGHT DATA	
Gross Weight (Crated lbs)	220
Gross Weight (Crated kg)	100

Note: Not all markings may apply to all model variations.
***N/A**:: Not available at time of printing.

PLAN VIEWS

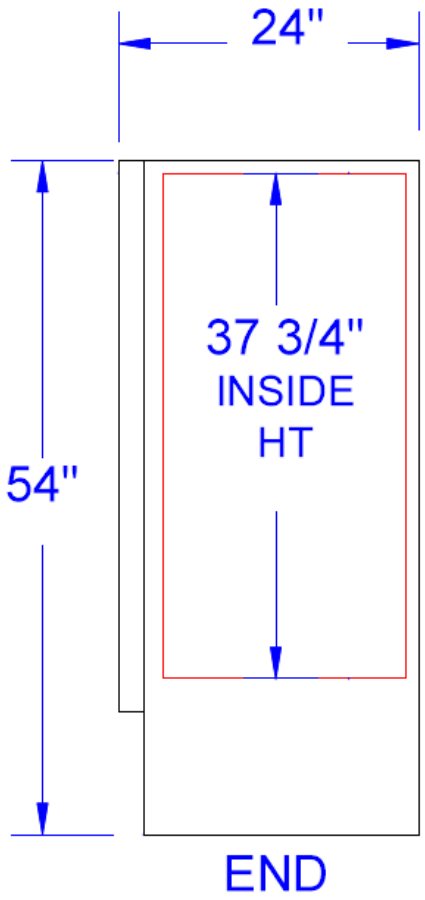

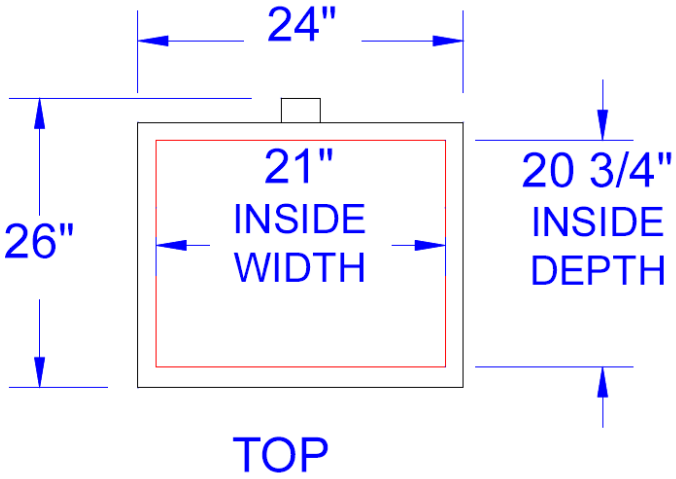

BEVERAGE-AIR® CORPORATION
3779 Champion Blvd. • Winston-Salem, NC 27105 USA • (336) 245-6400 • Fax (336) 245-6453 • (888) 845-9800 • www.beverage-air.com

Specifications are subject to change without prior notice. 06/10
Tundra Specialties