Item No. _____
Quantity _____

BEVERAGE-AIR

3779 Champion Blvd., Winston-Salem, NC 27105
1-888-845-9800 Fax# 1-336-245-6453
http://www.Beverage-Air.com

Commercial Refrigeration Equipment
General Specification

SLIDING GLASS DOOR LUMAVUE™ MERCHANDISER SERIES
LV17

MODEL: LV17

LUMAVUE SERIES—GLASS DOOR MERCHANDISER
Used for merchandising and storage of product.

CABINET CONSTRUCTION
Heavy duty construction includes white coated steel interior walls. Exterior finish is heavy-duty steel with a baked on durable coating. Choose from black or white finish.

Foamed-in-place CFC and HCFC-free polyurethane insulation enhances the structural strength of the cabinet and helps increase energy efficiency.

Modern, one-piece grille is easily removed for cleaning and servicing.

Double pane, lowE argon filled glass doors feature inside and outside panes that are tempered for added safety.

Two sliding glass doors feature integral low profile door handles that are more aesthetically pleasing.

Hold-open feature is standard.

Four white epoxy coated steel shelves are standard.

REFRIGERATION
Whisper-quiet refrigeration system uses R134a refrigerant, which is CFC and HCFC-free for compliance with environmental safety concerns.

Product temperatures from 32°F to 40°F.

ELECTRICAL
Interior fluorescent lighting enhances product illumination. Optional LED lighting provides hidden light source for increased product visibility. LED bulbs last up to 10 times longer compared to fluorescent bulbs and renders additional energy savings due to reduced wattage load on compressor.

Units wired at factory and ready for connection to a 115/60/1 phase, 15 amp dedicated outlet. 8' long cord and plug set included.

LV17

SPECIAL FEATURES
- Whisper-quiet refrigeration system
- Sliding glass doors
- Optional LED lighting
- 2010 Federal Energy Compliant
- Gravity Flo kits, Bev-Trac and Can Roller options available

ELECTRICAL CONNECTION

115/60/1
NEMA-5-15P

Units pre-wired at factory and include 8' long cord and plug set.

Available From:

*Note: Not all markings may apply to all model variations.

Model Specified	_____	**Store#**	_____
Location	_____	**Quantity**	_____

BEVERAGE-AIR

LumaVue
Glass Door Merchandisers
Model: LV17

MODEL	LV17
EXTERNAL DIMENSIONAL DATA	
Length Overall (inches) Length Overall (mm)	36” 914
Depth Overall (inches) Depth Overall (mm)	24” 610
Height Overall— (inches) Height Overall— (mm)	60” 1524
Number of doors	2
INTERNAL DIMENSIONAL DATA	
NET Capacity (cubic ft.) NET Capacity (Liters)	17.5 481
Internal Length Overall (inches) Internal Length Overall (mm)	33” 838
Internal Depth Overall (inches) Internal Depth Overall (mm)	21” 533
Internal Height Overall—(inches) Internal Height Overall—(mm)	46 7/8” 1190
Number of shelves	4
ELECTRICAL DATA	
Full Load Amperes 115/60/1	6.2 A
REFRIGERATION DATA	
Horsepower	1/3
WEIGHT DATA	
Gross Weight (Crated lbs)	400
Gross Weight (Crated kg)	182

Note: Not all markings may apply to all model variations.

PLAN VIEWS

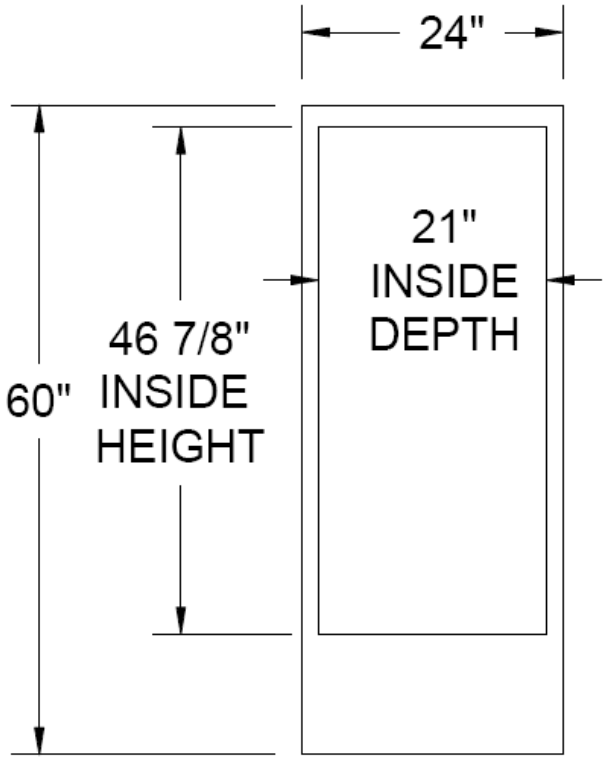

END

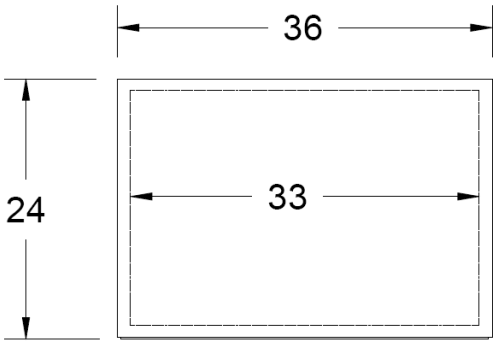

TOP

BEVERAGE-AIR® CORPORATION
3779 Champion Blvd. • Winston-Salem, NC 27105 USA • (336) 245-6400 • Fax (336) 245-6453 • (888) 845-9800 • www.beverage-air.com

Specifications are subject to change without prior notice. 06/10
Tundra Specialties