Item No. _____
Quantity _____

BEVERAGE-AIR

3779 Champion Blvd., Winston-Salem, NC 27105
1-888-845-9800 Fax# 1-336-245-6453
http://www.Beverage-Air.com

Commercial Refrigeration Equipment
General Specification

HINGED GLASS DOOR LUMAVUE MERCHANDISER SERIES
LV27

MODEL: LV27

LUMAVUE SERIES—GLASS DOOR MERCHANDISER
Used for merchandising and storage of product.

CABINET CONSTRUCTION
Heavy duty construction includes white coated steel interior walls. Exterior finish is heavy-duty steel with a baked on durable coating. Choose from black or white finish.

Foamed-in-place CFC and HCFC-free polyurethane insulation enhances the structural strength of the cabinet and helps increase energy efficiency.

Modern, one-piece grille is easily removed for cleaning and servicing.

Double pane, lowE argon filled glass door features inside and outside panes that are tempered for added safety.

Self-closing, hinged glass door features recessed, pocket door handle provides low profile and is more aesthetically pleasing. Door provides automatic hold-open feature.

Five white epoxy coated steel shelves are standard.

Brightly lighted sign panel.

REFRIGERATION
Whisper-quiet refrigeration system uses R134a refrigerant, which is CFC and HCFC-free for compliance with environmental safety concerns.

Product temperatures from 32°F to 40°F.

ELECTRICAL
Interior fluorescent lighting enhances product illumination. Optional LED lighting provides hidden light source for increased product visibility. LED bulbs last up to 10 times longer compared to fluorescent bulbs and renders additional energy savings due to reduced wattage load on compressor.

Units wired at factory and ready for connection to a 115/60/1 phase, 15 amp dedicated outlet. 8' long cord and plug set included.

LV27 (shown with 4 shelves)

SPECIAL FEATURES
- LV27 has earned the ENERGY STAR®
- Whisper-quiet refrigeration system
- Recessed, pocket door handle
- Brightly lighted sign panel
- Optional LED lighting
- 2010 Federal Energy Compliant
- Gravity Flo kits and Can Roller options available

ELECTRICAL CONNECTION

115/60/1
NEMA-5-15P

Units pre-wired at factory and include 8' long cord and plug set.

*Note: Not all markings may apply to all model variations.

Available From:

Model Specified	_____	**Store#**	_____
Location	_____	**Quantity**	_____

BEVERAGE-AIR

LumaVue Glass Door Merchandisers
Model: LV27

MODEL	LV27
EXTERNAL DIMENSIONAL DATA	
Length Overall (inches) Length Overall (mm)	30” 762
Depth Overall (inches) Depth Overall (mm)	32” 813
Height Overall— (inches) Height Overall— (mm)	78” 1981
Number of doors	1
Depth with Door Open 90 °	60”
INTERNAL DIMENSIONAL DATA	
NET Capacity (cubic ft.) NET Capacity (Liters)	27 765
Internal Length Overall (inches) Internal Length Overall (mm)	27” 686
Internal Depth Overall (inches) Internal Depth Overall (mm)	28 1/2” 724
Internal Height Overall—(inches) Internal Height Overall—(mm)	61 3/4” 1569
*Internal Height to Evaporator Housing—(inches) *Internal Height to Evaporator Housing—(mm)	54” 1372
Number of shelves	5
ELECTRICAL DATA	
Full Load Amperes 115/60/1	5.8 A
ENERGY CONSUMPTION	4.0 kWh/Day
REFRIGERATION DATA	
Horsepower	1/3
WEIGHT DATA	
Gross Weight (Crated lbs)	373
Gross Weight (Crated kg)	169

Note: Not all markings may apply to all model variations.
*Internal height to evaporator housing.

PLAN VIEWS

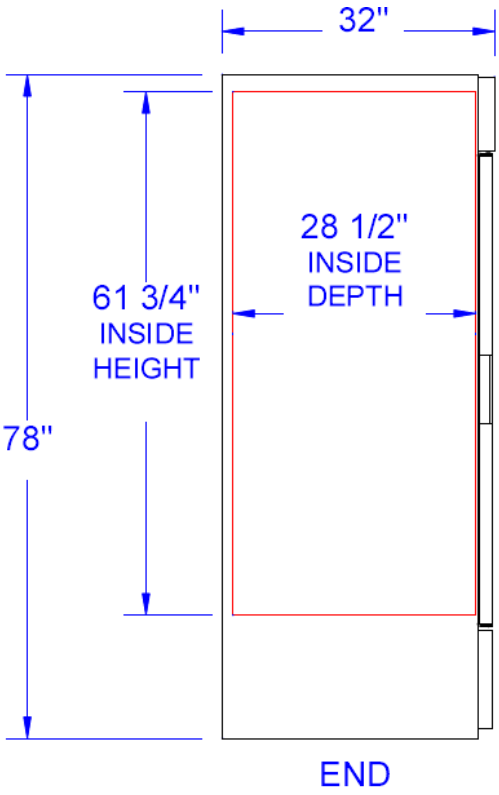

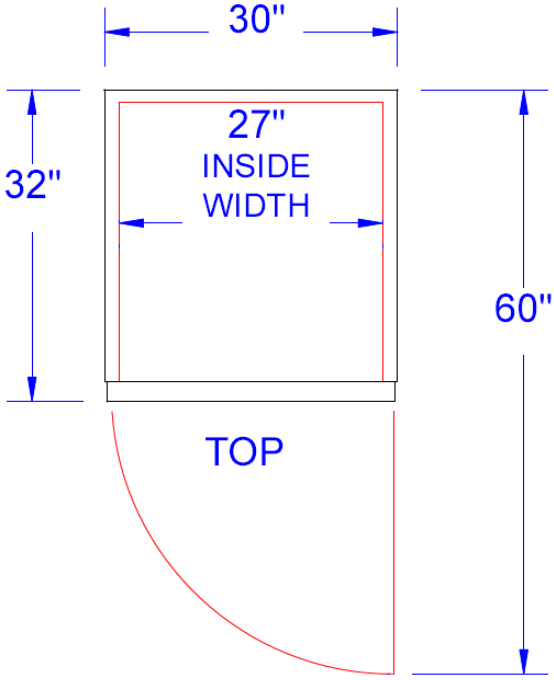

BEVERAGE-AIR® CORPORATION
3779 Champion Blvd. • Winston-Salem, NC 27105 USA • (336) 245-6400 • Fax (336) 245-6453 • (888) 845-9800 • www.beverage-air.com

Specifications are subject to change without prior notice. 12/10
Tundra Specialties