Item No. _____
Quantity _____

# BEVERAGE-AIR

3779 Champion Blvd., Winston-Salem, NC 27105
1-888-845-9800 Fax# 1-336-245-6453
http://www.Beverage-Air.com

**Commercial Refrigeration Equipment**
**General Specification**

## SLIDING GLASS DOOR LUMAVUE MERCHANDISER SERIES
**LV38**

**MODEL: LV38**

### LUMAVUE SERIES—GLASS DOOR MERCHANDISER
Used for merchandising and storage of product.

### CABINET CONSTRUCTION
Heavy duty construction includes white coated steel interior walls. Exterior finish is heavy-duty steel with a baked on durable coating. Choose from black or white finish.

Foamed-in-place CFC and HCFC-free polyurethane insulation enhances the structural strength of the cabinet and helps increase energy efficiency.

Modern, one-piece grille is easily removed for cleaning and servicing.

Double pane, lowE argon filled glass doors feature inside and outside panes that are tempered for added safety.

Two sliding glass doors feature integral door handles that provide low profile and are more aesthetically pleasing.
Hold-open feature is standard.

Five white epoxy coated steel shelves per door are standard.

Brightly lighted sign panel.

### REFRIGERATION
Whisper-quiet refrigeration system uses R134a refrigerant, which is CFC and HCFC-free for compliance with environmental safety concerns.

Product temperatures from 32°F to 40°F.

### ELECTRICAL
Interior fluorescent lighting enhances product illumination.
Optional LED lighting provides hidden light source for increased product visibility. LED bulbs last up to 10 times longer compared to fluorescent bulbs and renders additional energy savings due to reduced wattage load on compressor.

Units wired at factory and ready for connection to a 115/60/1 phase, 15 amp dedicated outlet. 8' long cord and plug set included.

**LV38 (shown with 4 shelves per section)**

### SPECIAL FEATURES
- LV38 has earned the ENERGY STAR®
- Whisper-quiet refrigeration system
- Sliding glass doors
- Brightly lighted sign panel
- Optional LED lighting
- 2010 Federal Energy Compliant
- Gravity Flo kits and Can Roller options available

### ELECTRICAL CONNECTION

115/60/1
NEMA-5-15P

Units pre-wired at factory and include 8' long cord and plug set.

Available From:

*Note: Not all markings may apply to all model variations.

| | | | |
|---|---|---|---|
| **Model Specified** | _____ | **Store#** | _____ |
| **Location** | _____ | **Quantity** | _____ |

BEVERAGE-AIR

## LumaVue Glass Door Merchandisers
**Model: LV38**

| MODEL | LV38 |
|---|---|
| **EXTERNAL DIMENSIONAL DATA** | |
| Length Overall (inches)<br>Length Overall (mm) | 43 1/2”<br>1105 |
| Depth Overall (inches)<br>Depth Overall (mm) | 32”<br>813 |
| Height Overall— (inches)<br>Height Overall— (mm) | 78”<br>1981 |
| Number of doors | 2 |
| **INTERNAL DIMENSIONAL DATA** | |
| NET Capacity (cubic ft.)<br>NET Capacity (Liters) | 38<br>1037 |
| Internal Length Overall (inches)<br>Internal Length Overall (mm) | 40 1/2”<br>1029 |
| Internal Depth Overall (inches)<br>Internal Depth Overall (mm) | 27”<br>686 |
| Internal Height Overall—(inches)<br>Internal Height Overall—(mm) | 61 3/4”<br>1569 |
| *Internal Height to Evaporator Housing—(inches)<br>*Internal Height to Evaporator Housing—(mm) | 54”<br>1372 |
| Number of shelves | 10 |
| **ELECTRICAL DATA** | |
| Full Load Amperes 115/60/1 | 8.8 A |
| **ENERGY CONSUMPTION** | 5.17 kWh/Day |
| **REFRIGERATION DATA** | |
| Horsepower | 1/3 |
| **WEIGHT DATA** | |
| Gross Weight (Crated lbs) | 471 |
| Gross Weight (Crated kg) | 214 |

**Note**: Not all markings may apply to all model variations.
*Internal height to evaporator housing.

### PLAN VIEWS

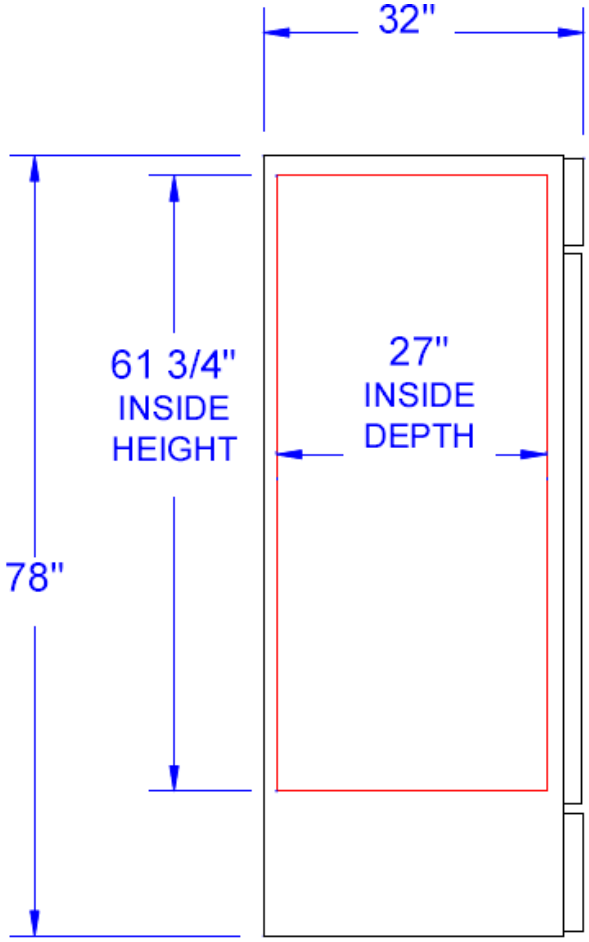


END

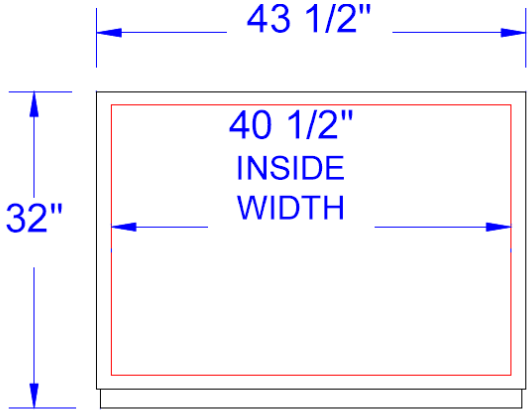


TOP

**BEVERAGE-AIR® CORPORATION**
3779 Champion Blvd. • Winston-Salem, NC 27105 USA • (336) 245-6400 • Fax (336) 245-6453 • (888) 845-9800 • www.beverage-air.com

Specifications are subject to change without prior notice. 12/10
Tundra Specialties