Item No. _____
Quantity _____

BEVERAGE-AIR

3779 Champion Blvd., Winston-Salem, NC 27105
1-888-845-9800 Fax# 1-336-245-6453
http://www.Beverage-Air.com

Commercial Refrigeration Equipment
General Specification

HINGED GLASS DOOR LUMAVUE MERCHANDISER SERIES
LV49

MODEL: LV49

LUMAVUE SERIES—GLASS DOOR MERCHANDISER
Used for merchandising and storage of product.

CABINET CONSTRUCTION
Heavy duty construction includes white coated steel interior walls. Exterior finish is heavy-duty steel with a baked on durable coating. Choose from black or white finish.

Foamed-in-place CFC and HCFC-free polyurethane insulation enhances the structural strength of the cabinet and helps increase energy efficiency.

Modern, one-piece grille is easily removed for cleaning and servicing.

Double pane, lowE argon filled glass doors feature inside and outside panes that are tempered for added safety.

Two self-closing, hinged glass doors feature recessed, pocket door handles that provide low profile and are more aesthetically pleasing. Doors offer automatic hold-open feature.

Five white epoxy coated steel shelves per door are standard.

Brightly lighted sign panel.

REFRIGERATION
Whisper-quiet refrigeration system uses R134a refrigerant, which is CFC and HCFC-free for compliance with environmental safety concerns.

Product temperatures from 32°F to 40°F.

ELECTRICAL
Interior fluorescent lighting enhances product illumination. Optional LED lighting provides hidden light source for increased product visibility. LED bulbs last up to 10 times longer compared to fluorescent bulbs and renders additional energy savings due to reduced wattage load on compressor.

Units wired at factory and ready for connection to a 115/60/1 phase, 15 amp dedicated outlet. 8' long cord and plug set included.

LV49 (shown with 4 shelves per section)

SPECIAL FEATURES
- LV49 has earned the ENERGY STAR®
- Whisper-quiet refrigeration system
- Hinged glass doors
- Recessed, pocket door handles
- Brightly lighted sign panel
- Optional LED lighting
- 2010 Federal Energy Compliant
- Gravity Flo kits and Can Roller options available

ELECTRICAL CONNECTION

115/60/1
NEMA-5-15P

Units pre-wired at factory and include 8' long cord and plug set.

*Note: Not all markings may apply to all model variations.

Available From:

Model Specified	_____	**Store#**	_____
Location	_____	**Quantity**	_____

BEVERAGE-AIR

LumaVue Glass Door Merchandisers
Model: LV49

MODEL	LV49
EXTERNAL DIMENSIONAL DATA	
Length Overall (inches) Length Overall (mm)	52” 1321
Depth Overall (inches) Depth Overall (mm)	32” 813
Height Overall— (inches) Height Overall— (mm)	78” 1981
Number of doors	2
Depth with Door Open 90 °	60”
INTERNAL DIMENSIONAL DATA	
NET Capacity (cubic ft.) NET Capacity (Liters)	49 1388
Internal Length Overall (inches) Internal Length Overall (mm)	47 16/25” 1210
Internal Depth Overall (inches) Internal Depth Overall (mm)	28 1/2” 724
Internal Height Overall—(inches) Internal Height Overall—(mm)	61 3/4” 1569
*Internal Height to Evaporator Housing—(inches) *Internal Height to Evaporator Housing—(mm)	54” 1372
Number of shelves	10
ELECTRICAL DATA	
Full Load Amperes 115/60/1	8.8 A
ENERGY CONSUMPTION	5.82 kWh/Day
REFRIGERATION DATA	
Horsepower	1/3
WEIGHT DATA	
Gross Weight (Crated lbs)	531
Gross Weight (Crated kg)	241

Note: Not all markings may apply to all model variations.
*Internal height to evaporator housing.

PLAN VIEWS

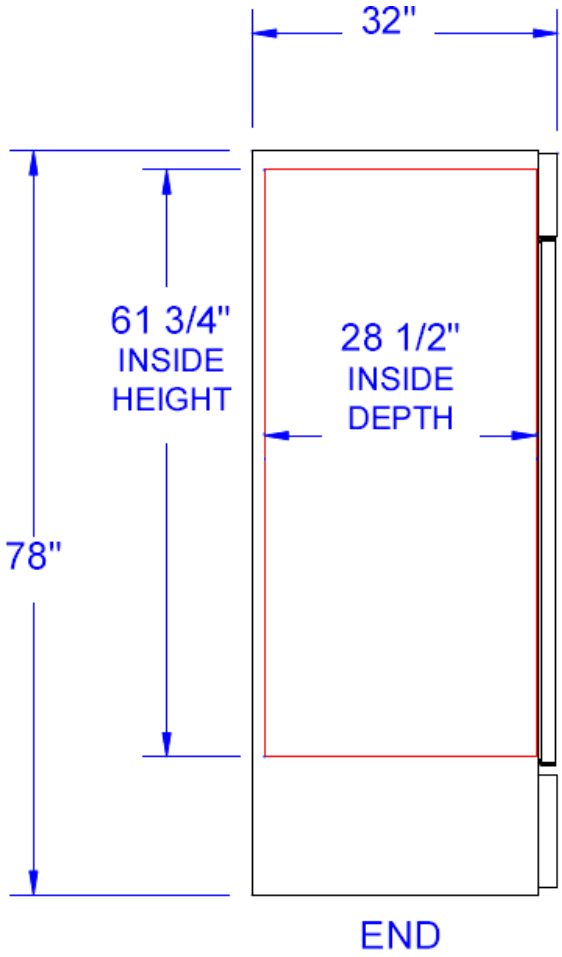

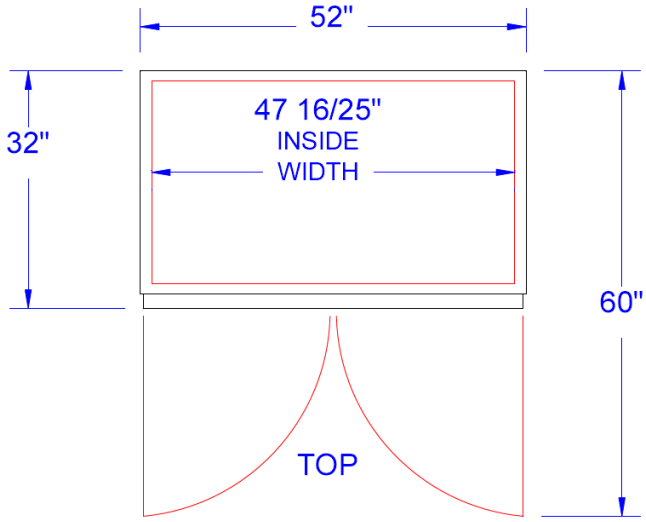

BEVERAGE-AIR® CORPORATION
3779 Champion Blvd. • Winston-Salem, NC 27105 USA • (336) 245-6400 • Fax (336) 245-6453 • (888) 845-9800 • www.beverage-air.com

Specifications are subject to change without prior notice. 12/10
Tundra Specialties