Item No. _____
Quantity _____

BEVERAGE-AIR

3779 Champion Blvd., Winston-Salem, NC 27105
1-888-845-9800 Fax# 1-336-245-6453
http://www.Beverage-Air.com

HINGED GLASS DOOR MARKETMAX™ MERCHANDISER SERIES

MM72 Refrigerator and Freezers
Triple Door

MODEL:
MMR72
MMF72

Commercial Refrigeration Equipment
General Specification

MARKETMAX™ MERCHANDISER SERIES—GLASS DOOR MERCHANDISER

Triple section glass door merchandiser with lighted sign panel used for merchandising and storage of frozen food, frozen novelty items and cold product.

CABINET CONSTRUCTION

Heavy duty construction includes white coated steel interior walls. Exterior finish is heavy-duty steel with a baked on durable coating. Choose from black or white finish. S/S exterior and black interior options are available.

Foamed-in-place CFC and HCFC-free polyurethane insulation.
Modern, one-piece grille is easily removed for cleaning and servicing.

Refrigerators have double pane, lowE argon filled glass doors. Freezer models have heated triple pane glass. Inside and outside panes are tempered for added safety. Anti-microbial door handles are standard. Doors provide automatic hold-open feature.

Brightly lighted sign panel.

SHELVING

Five (5) heavy duty epoxy coated wire shelves per section standard.
Four (4) shelf clips included per shelf (field installed).
Shelves are adjustable in ½" increments.

ELECTRONIC CONTROL

Electronic thermostat with manual defrost button provides a digital display of cabinet temperatures, which includes status indicators and key pad for any necessary temperature adjustments.

REFRIGERATION

Self-contained bottom mount refrigeration system. Expansion valve refrigerant control on freezer provides quick temperature pull down and reduces compressor run time—meaning reduced energy consumption. Includes automatic condensate disposal. Refrigerators utilize ozone friendly R134a refrigerant. Freezers utilize ozone friendly R404A refrigerant and its defrost system is fully automatic, time-initiated and temperature terminated operation.

Freezer product temperatures from –10°F to –15°F.
Refrigerator product temperatures from 36°F to 38°F.

ELECTRICAL

Interior fluorescent lighting enhances product illumination.
Optional LED lighting provides hidden light source for increased product visibility. LED bulbs last up to 10 times longer compared to fluorescent bulbs and renders additional energy savings due to reduced wattage load on compressor.

Refrigerator units wired at factory and ready for connection to a 115/60/1 phase, 15 amp dedicated outlet. **MMF72 freezers powered by 115/208-230 volts are designed for field wiring (requires 4-wire electrical circuit, hard-wired).**

MMR72-1-B
(SHOWN IN BLACK EXTERIOR)
White and S/S Exterior finishes available

SPECIAL FEATURES

- MMR72 and MMF72 have earned the ENERGY STAR®
- Anti-microbial door handles
- Electronic control with digital display
- Brightly lighted sign panel
- Optional LED lighting
- **Available options:** S/S Exterior, Black Interior, Wine Racks, Spring Feed Dividers, Casters, Audible Alarm With PM Feature, Smart Defrost

Refrigerator
115/60/1
NEMA-5-15P

ELECTRICAL CONNECTION
Units pre-wired at factory and include 8' long cord and plug set.

Available From:

*Note: Not all markings may apply to all model variations.

Model Specified	_____	**Store#**	_____
Location	_____	**Quantity**	_____

BEVERAGE-AIR

MarketMax™ Glass Door Merchandisers
Model: MMR72, MMF72

MODEL	MMR72	MMF72
EXTERNAL DIMENSIONAL DATA		
Length Overall (inches) Length Overall (mm)	75” 1905	75” 1905
Depth Overall (inches) - includes handle Depth Overall (mm) - includes handle	33 3/4” 857	33 3/4” 857
Height Overall— (inches) Height Overall— (mm)	78” 1981	78” 1981
Number of doors	3	3
Depth with Door Open 90 °	55”	55”
INTERNAL DIMENSIONAL DATA		
NET Capacity (cubic ft.) NET Capacity (Liters)	72 2039	72 2039
Internal Length Overall (inches) Internal Length Overall (mm)	72” 1829	72” 1829
Internal Depth Overall (inches) Internal Depth Overall (mm)	28 1/2” 724	28 1/2” 724
Internal Height Overall—(inches) Internal Height Overall—(mm)	61 3/4” 1569	61 3/4” 1569
Number of shelves	15	15
ELECTRICAL DATA		
Full Load Amperes	115/60/1 (9.9 A)	208-230V (15 A)
REFRIGERATION DATA		
Horsepower	1/3	(2) @ 1/2 hp
WEIGHT DATA		
Gross Weight (Crated lbs)	715	775
Gross Weight (Crated kg)	324	352

***Note**: Not all markings may apply to all model variations.
***Note:** Freezers powered by 115/208-230 volts are designed for field wiring (requires 4-wire electrical circuit, hard-wired).

PLAN VIEWS

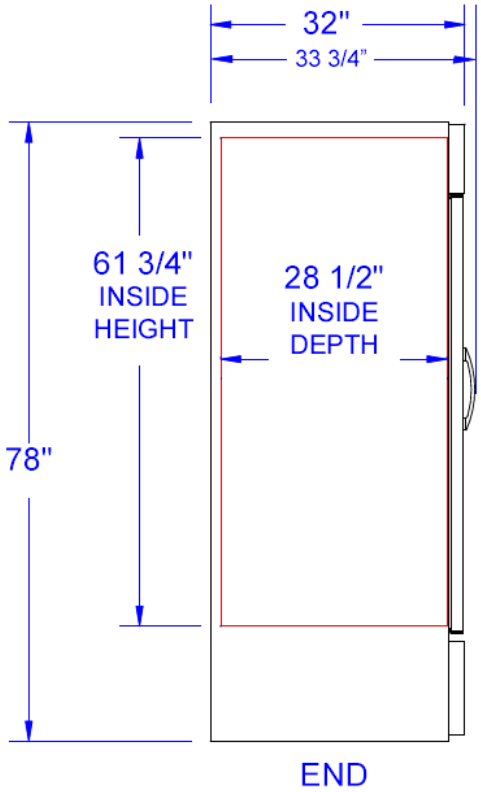

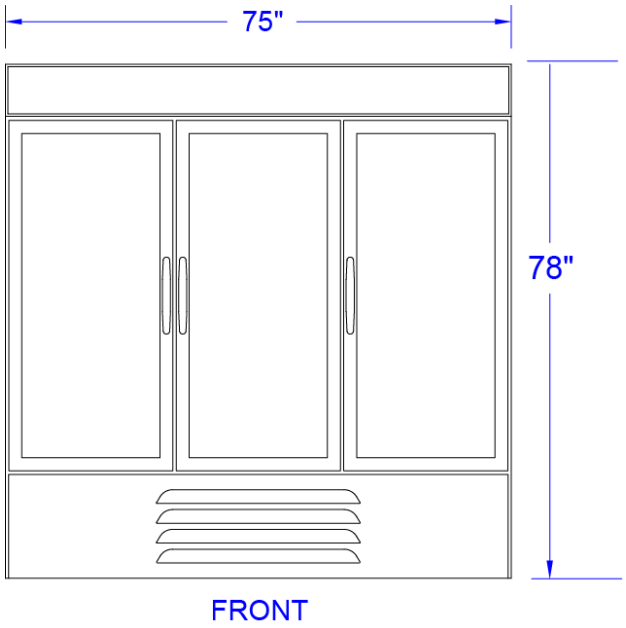

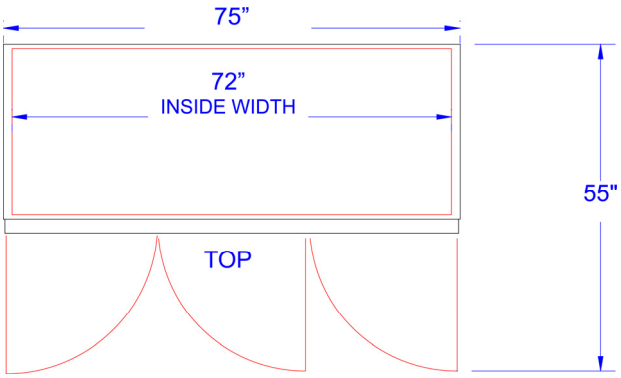

BEVERAGE-AIR® CORPORATION
3779 Champion Blvd. • Winston-Salem, NC 27105 USA • (336) 245-6400 • Fax (336) 245-6453 • (888) 845-9800 • www.beverage-air.com

Specifications are subject to change without prior notice. 03/11
Tundra Specialties