Item No. _____
Quantity _____

BEVERAGE-AIR

3779 Champion Blvd., Winston-Salem, NC 27105
1-888-845-9800 Fax# 1-336-245-6453
http://www.Beverage-Air.com

Commercial Refrigeration Equipment
General Specification

COUNTERTOP MERCHANDISER SERIES
CF3 Countertop Freezer

MODELS:
CF3

CF3 SERIES—COUNTERTOP FREEZER
Used for merchandising and storage of frozen product. Ideal for ice cream shops, restaurants, bars, supermarkets and convenience stores. Requires minimum countertop space.

CABINET CONSTRUCTION
Heavy duty construction includes pre-painted steel interior and exterior for easy cleaning.

Right-hand hinged door standard with insulated glass and stylish handle.

3 adjustable shelves included.

REFRIGERATION
Refrigeration system uses R404A refrigerant, which is CFC-free for compliance with environmental safety concerns.
Operating temperature of –1°F (-18°C).

Ambient conditions of 72°F at 65% relative humidity.

ELECTRICAL
Side, interior fluorescent lighting enhances product illumination.

Units wired at factory and ready for connection to a 115/60/1 phase, 15 amp dedicated outlet. 6.5' long cord and plug set included.

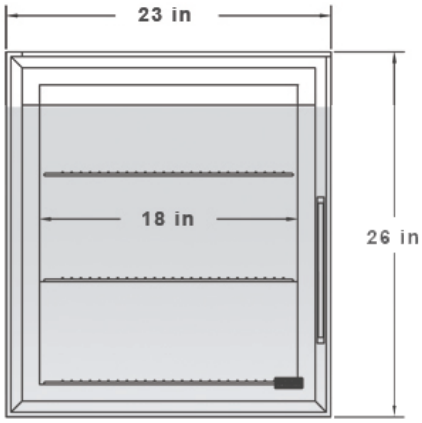

ELECTRICAL CONNECTION
Units pre-wired at factory and include 6.5' long cord and plug set.

115/60/1
NEMA-5-15P

CF3

MODEL	CF3
EXTERNAL DIMENSIONAL DATA	
Length Overall (inches) Length Overall (mm)	23" 584
Depth Overall (inches) Depth Overall (mm)	24" 610
Height Overall— (inches) Height Overall— (mm)	26" 660
Number of doors	1
INTERNAL DIMENSIONAL DATA	
NET Capacity (cubic ft.) NET Capacity (Liters)	3 85
Number of shelves	3
ELECTRICAL DATA	
Full Load Amperes 115/60/1	3
REFRIGERATION DATA	
Horsepower	1/6
WEIGHT DATA	
Gross Weight (Crated lbs)	110
Gross Weight (Crated kg)	50

5 YEAR COMPRESSOR WARRANTY USA

Available From: _____

***Note**: Not all markings may apply to all model variations.