Item No. _____
Quantity _____

BEVERAGE-AIR

3779 Champion Blvd., Winston-Salem, NC 27105
1-888-845-9800 Fax# 1-336-245-6453
http://www.Beverage-Air.com

Commercial Refrigeration Equipment
General Specification

OPEN-AIR CURTAIN MERCHANDISER SERIES
THE BREEZE

MODELS:
BZ13

BREEZE—OPEN-AIR CURTAIN MERCHANDISERS
Used for merchandising and storage of product. Contemporary curved design to fit all modern store layouts.

CABINET CONSTRUCTION
Heavy duty construction includes white coated steel interior walls. Exterior finish is heavy-duty steel with a baked on durable coating. Choose from black or white finish.

Foamed-in-place CFC and HCFC-free polyurethane insulation enhances the structural strength of the cabinet and helps increase energy efficiency.

Provides easy access with no doors to open. Open front maximizes display of product and helps provide increase sales and profits for the retailer. BZ13 features side shields to maximize product display.

Modern grille is easy to remove for cleaning and servicing.

Brightly lighted sign panel standard on the BZ13.

Gravity-Flo organizers come standard.

REFRIGERATION
Heavy-duty, high performance one-piece lift-out refrigeration system with hot gas condensate evaporator. No drain required. Refrigeration system on BZ13 utilizes R134a refrigerant.

Product temperatures from 32°F to 40°F.

ELECTRICAL
Interior lighting provided via two recessed interior lights for maximum product visibility.

Units wired at factory and ready for connection to a 115/60/1 phase, 15 amp dedicated outlet. 8' long cord and plug set included.

115/60/1
NEMA-5-15P

ELECTRICAL CONNECTION
Units pre-wired at factory and include 8' long cord and plug set.

BZ13
shown with optional signage

SPECIAL FEATURES
- Contemporary curved design with open front
- Gravity-Flo organizers standard
- Brightly lighted sign panel on BZ13

Available From:

***Note**: Not all markings may apply to all model variations.

Model Specified	_____	**Store#**	_____
Location	_____	**Quantity**	_____

BEVERAGE-AIR

PLAN VIEWS

Breeze Open-Air Curtain Merchandiser
Models: BZ13

MODEL	BZ13
EXTERNAL DIMENSIONAL DATA	
Length Overall (inches) Length Overall (mm)	29 3/4” 756
Depth Overall (inches) Depth Overall (mm)	32” 813
Height Overall— (inches) Height Overall— (mm)	54” 1372
INTERNAL DIMENSIONAL DATA	
NET Capacity (cubic ft.) NET Capacity (Liters)	13 368
Internal Length Overall (inches) Internal Length Overall (mm)	26” 660
Internal Depth Overall (inches) Internal Depth Overall (mm)	26 3/8” 670
Internal Height Overall—(inches) Internal Height Overall—(mm)	33 1/2” 851
Facings Per Shelf	8
Number of shelves	3
20 Oz. Case Capacity	7
ELECTRICAL DATA	
Full Load Amperes 115/60/1	12
ENERGY CONSUMPTION (KWH)	16.7
REFRIGERATION DATA	
Horsepower	1/2
WEIGHT DATA	
Gross Weight (Crated lbs)	350
Gross Weight (Crated kg)	159

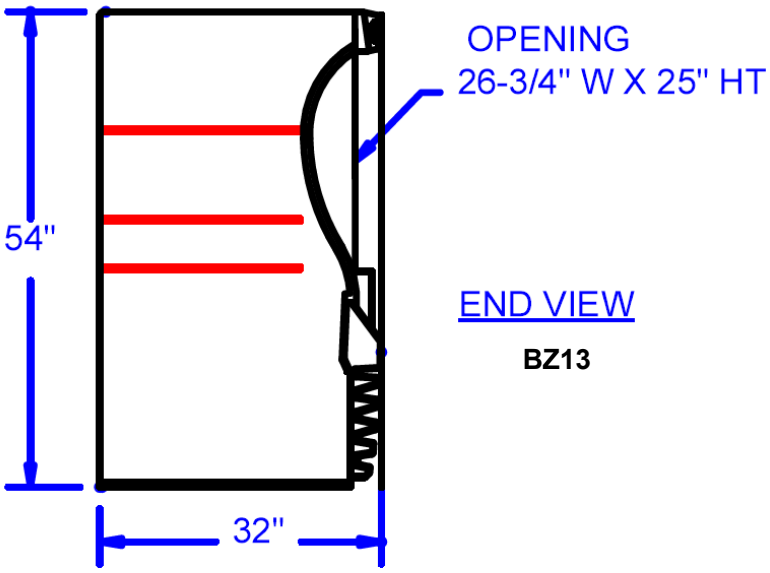

END VIEW

BZ13

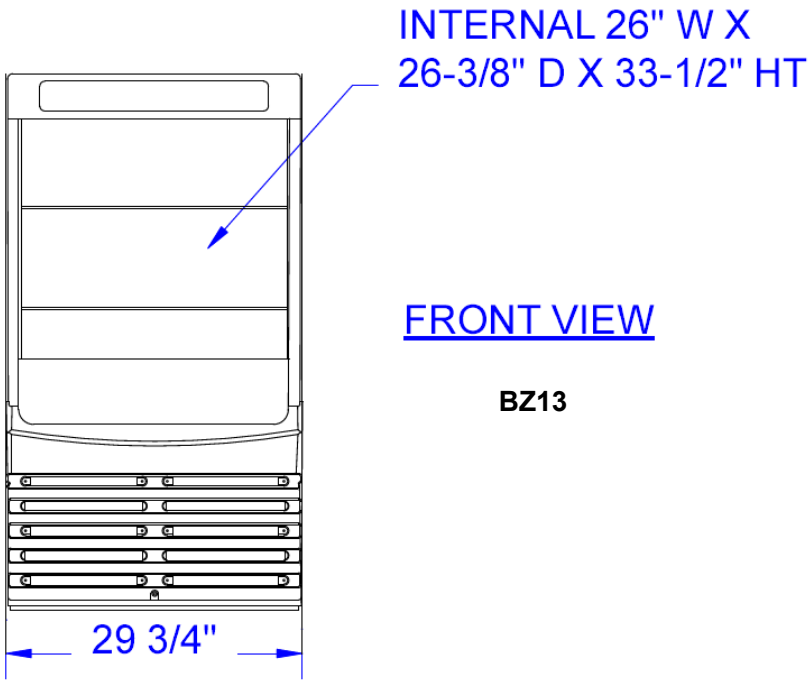

FRONT VIEW

BZ13

***Note**: Not all markings may apply to all model variations.

BEVERAGE-AIR® CORPORATION
3779 Champion Blvd. • Winston-Salem, NC 27105 USA • (336) 245-6400 • Fax (336) 245-6453 • (888) 845-9800 • www.beverage-air.com

Specifications are subject to change without prior notice. 06/10
Tundra Specialties