robot coupe®

"The Inventor & World Leader in Food Processors"

Mini Power Mixers

MMP160VV

MMP190VV

MMP240VV

MMP190VV Combi

MMP 240VV Combi

- Power: Single phase.
  MMP 160VV: 220 Watts
  MMP 190VV: 250 Watts
  MMP 240VV: 270 Watts
- Variable speed: from 2000 to12500 rpm
- Automatic speed self regulation system
- All stainless steel removable shaft on all three models and removable bell on MMP 190VV andMMP240VV for maximum sanitation.
- Reinforced coupling design for longer lifespan.
- Shaft length:
  MMP 160 VV - 7"
  MMP 190 VV - 8"
  MMP 240 VV - 12"
  Whisk length for Combi models: 8"
- 2 discs come standard with all models: one for cutting and one stirring.
- 1 Year "No Hassle" Replacement Warranty.
- ETL Electrical and Sanitation listed/CETL (Canada).

Mini size, Maxi Performance.
Ideal for "sauces and small quantities"

INTERTEK ETL LISTED C US INTERTEK ETL SANITATION LISTED

ETL LISTED 3055441
Conforms to
UL NSF/ANSI
Std 763 Std 8
Certified to
CAN/CSA
Std C22.2 No.195

Robot Coupe U.S.A., Inc.
P.O. Box 16625
Jackson, MS 39236-6625
1-800-824-1646 • (601) 898-8411
FAX: (601) 898-9134
www.robotcoupeusa.com • e-mail: info@robotcoupeusa.

robot coupe®

"The Inventor & World Leader in Food Processors"

Mini Power Mixers

Specifications

STANDARD MODEL: Variable Speed Power Mixer with stainless steel mixer attachment with removable stainless steel knife , mixer blade, splash guard, wall mount and blade disassembly tool. Combi models include 8" whisk.

ELECTRICAL REQUIREMENTS: 120V, 60HZ, single phase

SWITCHING: "On/Off control button and variable speed control.

MOTOR:

MMP 160VV: 220 Watts
MMP 190VV: 250 Watts
MMP 240VV: 270 Watts

SHIPPING WEIGHT:

MMP 160VV: 5 lbs
MMP 190VV: 5 lbs
MMP 240VV: 5 lbs

STANDARDS: ETL electrical & sanitation, cETL (Canada)

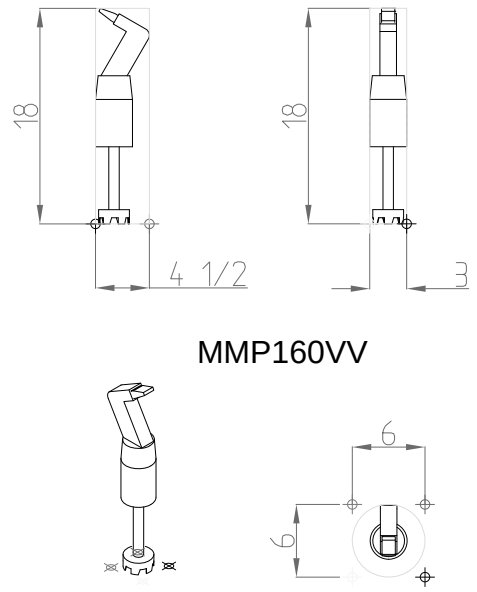

MMP160VV

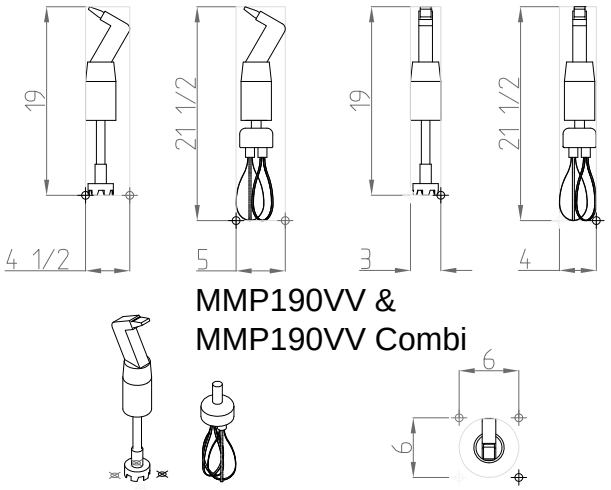

MMP190VV &
MMP190VV Combi

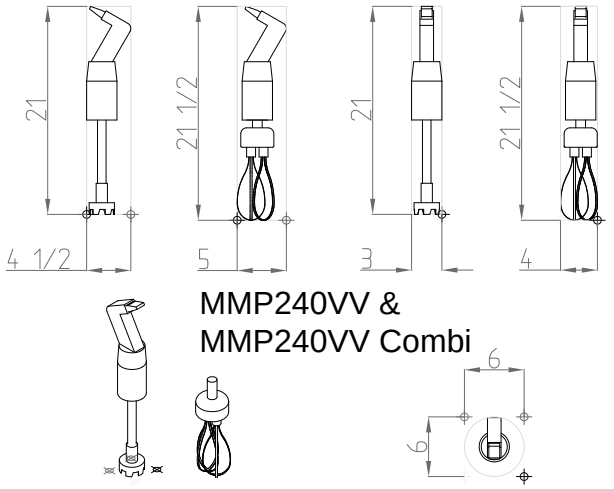

MMP240VV &
MMP240VV Combi

Ref #121106

Robot Coupe U.S.A., Inc.
P.O. Box 16625
Jackson, MS 39236-6625
1-800-824-1646
(601) 898-8411
FAX: (601) 898-9134
www.robotcoupeusa.com
e-mail: info@robotcoupeusa.com

Distributed by:

Robot Coupe reserves the right to change specifications. Call the factory for latest specifications and recommendations.
© 2003 Robot Coupe U.S.A., Inc. LItho in U.S.A. WKK 06/03