Project #: _____

Item #: _____

AIA File #: _____

Specification #: _____

36" Green Tech Range Series

Model Numbers

❑ IGT-6 ❑ IGT-6-C ❑ IGT-6-XB

Model IGT-6

Grate and burner with hot surface ignition.

Green Tech Range Features

- Stainless steel front, sides, backguard, shelf, landing ledge and kick plate. Stainless steel tubing through out range.
- Welded stainless steel seams.
- Large 5" (127) stainless steel landing ledge.
- 6" (152) heavy duty legs with adjustable feet.
- One year parts and labor warranty.
- AGA and CGA design certified, NSF and CE listed.

Cooktop - Open Burner Features

- Green Tech open burners are over 60% efficient compared to 40% on other standard burners.
- Green Tech burners are 24,000 BTU/hr (7 KW) with a 7,000 BTU/hr. (2 KW) low simmer feature.
- Induced aspiration venturi system on each open burner.
- No free standing pilots. Exclusively designed “hot surface” ignition system on all burners.
- Cast iron burners are removable for easy cleaning.
- No gaskets or screws.
- Redesigned top grates maximize the efficiency of the Green Tech open burner. Grates are in 12" x 12" (305 x 305) sections to easily lift off for cleaning.

Standard Oven Features

- Extra dense super wool insulation around oven cavity to keep the heat in the oven.
- Chef depth standard oven interior accommodates standard 18" x 26" (457 x 660) sheet pans front-to-back and side-by side. Interior is 26$^{1}/_{2}$" w x 26" d x 14" h (673 w x 660 d x 356 h).
- Extremely reliable hot “hot surface” ignition system on oven burner.
- Highly accurate, none modulation snap action oven thermostat. Heavy duty thermostat has temperature range from 150ºF to 500ºF (65ºC to 260ºC).
- Reformulated oven porcelain to reflect energy more efficiently. Porcelainized side, rear, deck and door lining.
- Redesigned oven burner with less BTU’s and increased efficiency. Unique baffle above the burner distributes heat flow to provide even cooking temperatures throughout the 30,000 BTU/hr. (9 KW) oven.
- Air knife in oven to capture heat when door is opened, keeps heat inside cavity.
- High temperature oven door gasket.
- Stamped inner door liner provides extra strength while optimizing heat retention.
- Door switch relocated to improve reliability.

All measurements in ( ) are metric equivalents.

Imperial Commercial Cooking Equipment

1128 Sherborn Street ■ Corona, CA 92879 ■ 800.343.7790 ■ Ph: 951.281.1830 ■ Fx: 951.281.1879

www.imperialrange.com ■ E-mail: imperialsales@imperialrange.com

Imperial 36" Green Tech Range Series

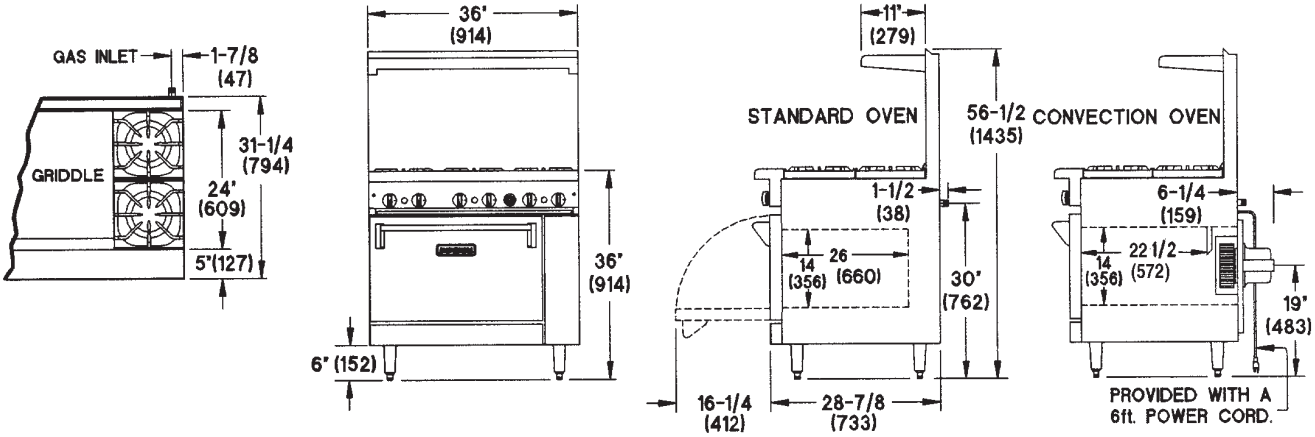

Model#	Description	Total BTU	Total (KW)	Ship Weight (Kg.)	Ship Weight Lbs.
IGT-6	6 Open Burners, 1 Standard Oven	174,000	(51)	(274)	605
IGT-6-C	6 Open Burners, 1 Convection Oven	164,000	(48)	(301)	665
IGT-6-XB	6 Open Burners, 1 Cabinet Base	144,000	(42)	(246)	545

Range Dimensions: 36" (914) w x 37 1/2"(953) d x 36" (914) h. Height to cooking surface.
Crated Dimensions: 38 1/2" (978) w x 39" (991) d x 35" (889) h. All measurements in ( ) are metric equivalent.

Standard Exterior Specifications
Front, sides, landing ledge, control panel, backguard with shelf and kick plate shall be constructed of stainless steel with welded and finished stainless steel seams. Control knobs shall be constructed of durable cast aluminum with a vylox heat protection grip. Chrome plated 6" (152) legs shall have adjustable feet.

Cooktop Specifications
Open burners shall be 24,000 BTU/hr. (7 KW) lift-off burners that are over 60% more efficient. There shall be no gaskets and no screws. Each burner shall have an exclusively designed “hot surface” ignition system and include an induced aspiration venturi system. Top grates shall be designed to maximize the efficiency of the Imperial Green Tech open burner. These heavy-duty cast iron grates shall be constructed in 12" x 12" (305 x 305) lift-off sections. A cast-in bowl shall direct heat upward. Drip tray shall be one piece and removable.

Standard Oven Specifications
Oven shall be 12 gauge construction with a welded front frame. Oven shall be fully insulated with an extra dense, super wool insulation. Oven interior shall have porcelainized sides, rear, deck and door lining that reflects energy more efficiently. Oven burner shall provide 30,000 BTU/hr. (9 KW). Unique baffle above the burner shall distribute heat flow to provide even cooking temperatures throughout the oven. The oven burner shall have an extremely reliable “hot surface” ignition system. Snap action, non modulation thermostat shall be adjustable from 150ºF to 500ºF (65ºC to 260ºC). Oven interior dimensions shall be 26 1/2" w x 26" d x 14" h (673 x 660 x 356). Oven shall be equipped with an air knife to capture heat when door is opened. Oven door shall have a high temperature gasket. Inner door liner shall be stamped to provide extra strength while optimizing heat retention. One heavy duty locking chrome plated rack shall be included.

Convection Oven Specifications
Shall have same exterior as standard oven. 1/4 HP, 1725 RPM blower motor (120VAC-60 HZ - 1Ph) with 5 amp draw. a 3-prong 6' (1829mm) power cord shall be provided. Output shall be 20,000 BTU/hr. (6 KW) with “U” burner and shall have an extremely reliable “hot surface” ignition system. Unit shall include three heavy duty chrome plated racks supported by chrome plated guides. Unit shall include three-position switch for cooking or cool down, a burner “on” indicator light and one hour manual timer. Thermostat shall be adjustable from 150ºF to 500ºF. Oven interior dimensions shall be 26 1/2" w x 22 1/2" d x 14" h (673 x 572 x 356).

Gas: Manifold pressure is 5.0" W.C. for natural gas or 10.0" for propane gas. Manifold size 3/4"(19) NPT. 3/4" (19) pressure regulator supplied with equipment to be installed at time of connection. Specify type of gas and elevation if over 2000 ft. (610 m).

Clearance: For use only on non-combustible floors. Legs or casters are required for non-combustible floors; or 2" (51) overhang is required when curb mounted. Provide 0" clearance from non-combustible surfaces and 8" (203) from combustible surfaces.

Optional Items:
- Extra chrome rack
- Reinforcement channels for mounting cheesemelter/salamander
- 10" (254) stainless steel wok ring
- Saute burner head
- Wok burner head
- 220V motor and transformer
- Extra oven racks
- Gas shut off valve 3/4" (19)
- Quick disconnect and flexible gas hose
- 6" (152) casters

Specification #: _____

AIA File #: _____

Imperial Commercial Cooking Equipment
1128 Sherborn Street ■ Corona, CA 92879 ■ 800.343.7790 ■ Ph: 951.281.1830 ■ Fx: 951.281.1879
www.imperialrange.com ■ E-mail: imperialsales@imperialrange.com

 © 2008 Imperial Commercial Cooking Equipment All specifications subject to change without notice. Printed in the U.S.A.