Project #: _____

Item #: _____

AIA File #:

Specification #:

Heavy Duty Range Series Roast Oven

Model Numbers

- ❏ IHR-RO
- ❏ IHR-2RO
- ❏ IHR-RO-C
- ❏ IHR-2RO-M

Model IHR-RO

Heavy Duty Range Features

- Stainless steel front, oven door, control panel, landing ledge and kick plate.
- Large 7” (178) stainless steel landing ledge.
- Enclosed front 1 1/4” (32) manifold.
- 6" (152) heavy duty legs, with adjustable feet.
- One year parts and labor warranty.
- AGA and CGA design certified, NSF and CE listed.

Standard Oven Features

- Chef Depth standard oven interior accommodates standard 18” x 26” (457 x 660) sheet pans front-to-back and side-by side. Interior is 26 1/2” w x 28” d x 14” h (673 w x 711 d x 356 h).
- 100% safety pilot.
- Oven controls located on the side in cool zone.
- Manual oven shut-off valve.
- Heavy duty thermostat with temperature range from 150°F to 500°F. (65°C to 260°C)
- Porcelainized side, rear, deck and door lining.
- Unique baffle above the burner distributes heat flow to provide even cooking temperatures throughout the 40,000 BTU/hr. (12 KW) oven.
- Stamped inner door liner provides extra strength while optimizing heat retention.

Convection Oven Features (add suffix C)

- Convection oven with 1/4 hp blower motor is optional, cooks products faster and evenly with less shrinkage.
- Convection oven interior dimensions 26 1/2” w x 22 1/2” d x 14” h (673 w x 572 d x 356 h).
- Three position switch for cooking or cool down.
- Burner “ON” indicator light and one hour manual timer. Fan shuts off automatically when door is open.

All measurements in ( ) are metric equivalents.

Imperial Commercial Cooking Equipment

1128 Sherborn Road ■ Corona, CA 92879 ■ 800.343.7790 ■ Ph: 951.281.1830 ■ Fx: 951.281.1879

www.imperialrange.com ■ E-mail: imperialsales@imperialrange.com

Imperial Heavy Duty Range Series - Roast Ovens

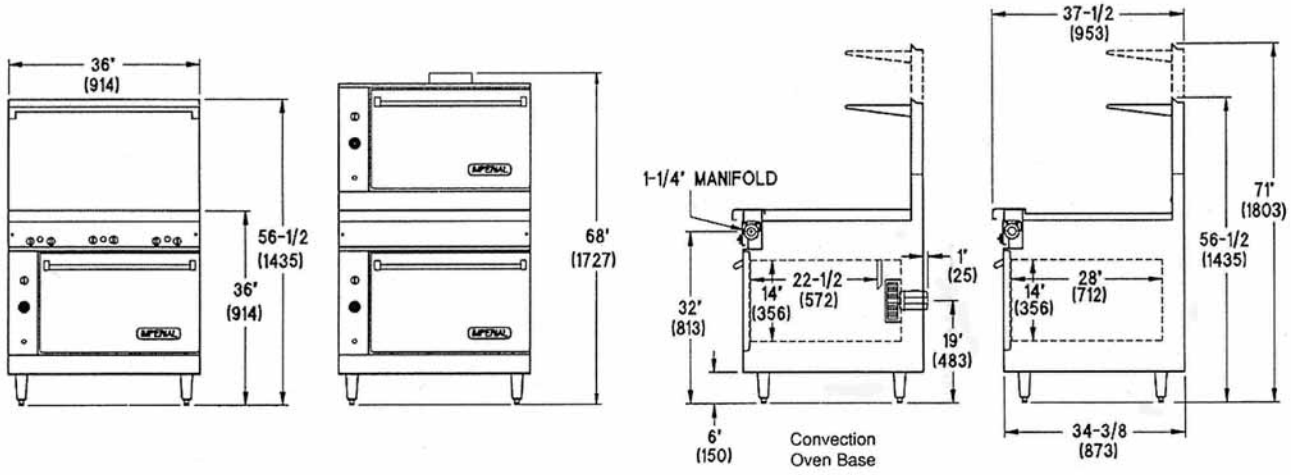

Heavy Duty Range Series - Roast Ovens

Model#	Description	Width	Depth	Height	Total BTU	Total (KW)	Ship Wt. (Kg.)	Ship Wt. Lbs.
IHR-RO	Standard Oven	36" (914)	37 1/2"(953)	36" (914)	40,000	(12)	(236)	520
IHR-RO-C	Convection Oven	36" (914)	37 1/2"(953)	36" (914)	35,000	(10)	(263)	580
IHR-2RO	Two Standard Ovens, Stacked	36" (914)	37 1/2"(953)	68" (1727)	80,000	(23)	(340)	751
IHR-RO-M	Modular (no base)	36" (914)	37 1/2"(953)	36" (914)	40,000	(12)	(228)	502

All measurements in ( ) are metric equivalents.

Crated Dimensions: 39" (991) d x 40" (1016) w x 38 1/2" (978) h.

Standard Exterior Finish

- **Stainless Steel:** Front oven door, landing ledge, control panel and kick plate. Welded and finished stainless steel seams.
- **Control Knobs:** Durable cast metal, polished chrome finish.
- **Legs:** Chrome plated 6" (152) legs with adjustable feet.

Standard Oven Specifications

- **Construction:** 12 gauge construction with welded front frame. Fully insulated with non-sag fiberglass. Porcelainized oven interior sides, rear, deck and door lining. Oven burner provides 30,000 BTU/hr. Unique baffle above the burner distributes heat flow to provide even cooking temperatures throughout the oven. 100% safety pilot. One heavy duty locking chrome plated rack. 100% safety pilot. One heavy duty locking chrome plated rack.
- **Controls:** Thermostat adjustable from 150ºF to 500ºF (65ºC to 260ºC).
- **Dimensions:** 26 1/2" w x 28" d x 14" h (673 w x 711 d x 356 h) oven interior dimensions accommodates sheet pans front to back.

Convection Oven Specifications

- **Construction:** Same construction specifications as standard oven.
- **Controls:** Thermostat adjustable from 150ºF to 500ºF. (65ºC to 260ºC). Three position switch for cooking or cool down. Burner "ON" indicator light and one hour manual timer. Fan shuts off automatically when door is open.
- **Dimensions:** 26 1/2" w x 22 1/2" d x 14" h (673 w x 572 d x 356 h).

Gas

Manifold pressure is 5.0" W.C. for natural gas or 10.0" for propane gas. Manifold size 1 1/4" (32) NPT. 1 1/4" (32) pressure regulator supplied with equipment to be installed at time of connection. Specify type of gas and elevation if over 2000 ft.

Clearance

For use only on non-combustible floors. Legs or casters are required for non-combustible floors; or 2" overhang is required when curb mounted. Provide 0" clearance from non-combustible surfaces and 8" from combustible surfaces.

Optional Items

■ Extra chrome rack ■ Reinforcement channels for mounting cheese melter/salamander ■ Stainless steel single or double shelves (specify style) ■ Gas pressure regulator ■ Rear gas connection ■ Gas shut off valve (specify size) ■ Quick disconnect and flexible gas hose ■ 6" (152) casters

Specification #:

AIA File #:

Imperial Commercial Cooking Equipment

1128 Sherborn Road ■ Corona, CA 92879 ■ 800.343.7790 ■ Ph: 951.281.1830 ■ Fx: 951.281.1879

www.imperialrange.com ■ E-mail: imperialsales@imperialrange.com

 © 2006 Imperial Commercial Cooking Equipment All specifications subject to change without notice. Printed in the U.S.A.