Project #: _____

Item #: _____

AIA File #: _____

Infra-red Cheesemelter/Broiler

Model ICMA-36

Equipped with gas fired pre-mixed atmospheric infra-red burner

Range Match Features

- Stainless steel front and sides.
- Welded stainless steel seams.
- One year parts and labor warranty.
- AGA and CGA design certified, NSF and CE listed.

Model Numbers
Thermostat Controlled Griddles

- ❑ ICMA-24
- ❑ ICMA-36
- ❑ ICMA-48
- ❑ ICMA-60
- ❑ ICMA-72
- ❑ ICMA-84

Cheesemelter/Broiler Features

- Gas fired infra-red burner provides instant, even heating.
  ICMA-24 is 20,000 BTU/hr. (6 KW)
  ICMA-36 is 35,000 BTU/hr. (10 KW)
  ICMA-48 is 40,000 BTU/hr. (12 KW)
  ICMA-60 is 55,000 BTU/hr. (16 KW)
  ICMA-72 is 70,000 BTU/hr. (20 KW)
  ICMA-84 is 80,000 BTU/hr. (23 KW)
- Adjustable gas valve.
- Protective screen over infra-red burner.
- Individual left and right gas controls.
- Full width broiler pan can be easily removed for cleaning.
- Equipped with a chrome plated heavy duty rack.
- Cheesemelter/Broiler unit mounts over all Imperial Restaurant Ranges and can also be wall or counter mounted.

All measurements in ( ) are metric equivalents.

Specification #: _____

Imperial Commercial Cooking Equipment
1128 Sherborn Street ■ Corona, CA 92879 ■ 800.343.7790 ■ Ph: 951.281.1830 ■ Fx: 951.281.1879
www.imperialrange.com ■ E-mail: imperialsales@imperialrange.com

Imperial Infra-red Cheesemelter/Broiler Series

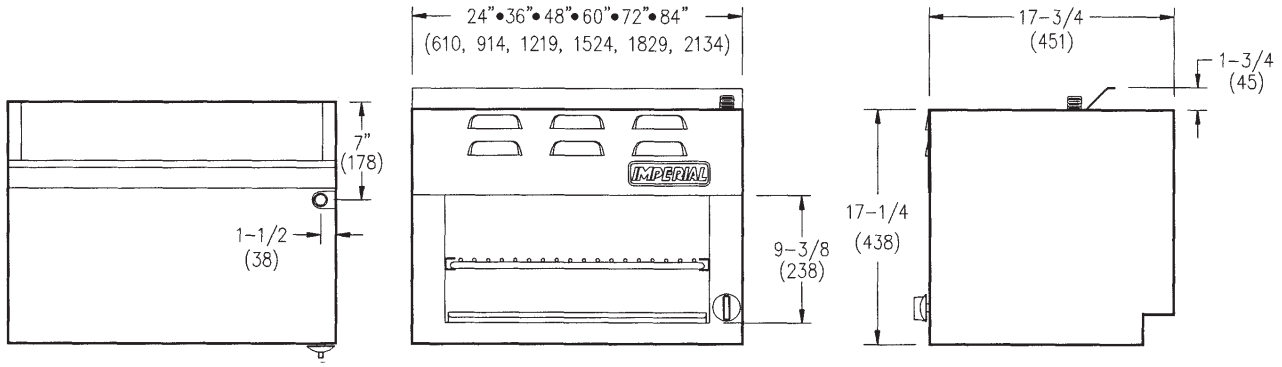

Model#	Description	Number of Burners	Total BTU	Total (KW)	Ship Wt. (Kg)	Ship Wt. Lbs.
ICMA-24	24" (610) Cheesemelter/Broiler	1	20,000	(6)	(48)	105
ICMA-36	36" (914) Cheesemelter/Broiler	1	35,000	(10)	(75)	162
ICMA-48	48" (1219) Cheesemelter/Broiler	2	40,000	(12)	(95)	208
ICMA-60	60" (1524) Cheesemelter/Broiler	2	55,000	(16)	(125)	275
ICMA-72	72" (1829) Cheesemelter/Broiler	2	70,000	(21)	(152)	335
ICMA-84	84" (2134) Cheesemelter/Broiler	3	80,000	(23)	(184)	405

Note: For pass-through models or to increase the height to accommodate additional shelves, contact the factory.

Overall Dimensions: Specified width x 23" (584) d x 21" (533) h.

Crated Dimensions: Add 2" (51) to width of unit x 25" (635) d x 25" (635) h. All measurements in ( ) are metric equivalents.

Standard Exterior Specifications

Front, sides, landing ledge, control panel, backguard with shelf and kick plate shall be stainless steel. All stainless steel seams shall be welded and finished. Control knobs shall be durable cast metal with a polished chrome finish.

Cheesemelter/Broiler Specifications

Burners shall be equipped with gas fired pre-mixed atmospheric infra-red burner(s) with the following BTU/hr (KW) ratings:

- ICMA-24 is 20,000 BTU/hr. (6 KW)
- ICMA-36 is 35,000 BTU/hr. (10 KW)
- ICMA-48 is 40,000 BTU/hr. (12 KW)
- ICMA-60 is 55,000 BTU/hr. (16 KW)
- ICMA-72 is 70,000 BTU/hr. (20 KW)
- ICMA-84 is 80,000 BTU/hr. (23 KW)

Burners shall have an adjustable gas valve and continuous pilot and individual left and right gas controls. There shall be a protective screen over burner.

Broiler pan shall be full width with a large capacity and remove for cleaning.

Broiler rack shall be full width, heavy duty and chrome plated.

Range mounting shall accommodate all Imperial Restaurant Ranges using optional heavy duty, reinforced channels that fit existing backguards. Unit shall be counter or wall mounted with optional wall mounting bracket.

Gas: Manifold pressure is 5.0" W.C. for natural gas or 10.0" for propane gas. Manifold size 3/4" NPT. 3/4" pressure regulator supplied with equipment to be installed at time of connection. Specify type of gas and elevation if over 2000 ft. (610 m).

Clearance for Range Mounting:
When Salamander is mounted on an Imperial Range, the clearance from the range surface to the bottom of the Salamander Broiler is 17" (432).

Clearance for Counter Mounting:
For use only on non-combustible counter tops. Provide 0" clearance from non-combustible surfaces and 4" (102) from combustible surfaces.

Optional Items:

- Imperial Restaurant Range, counter or wall mounting kits
- Heavy duty reinforcement channels for range mount
- Extra chrome plated rack
- 4" (102) legs for counter mounting
- Wall mounting bracket for wall mounting
- Stainless steel top, bottom and back
- One point 3/4" (19) gas connection from ICMA to IR range (specify IR range model)

Specification #: _____

AIA File #: _____

Imperial Commercial Cooking Equipment
1128 Sherborn Street ■ Corona, CA 92879 ■ 800.343.7790 ■ Ph: 951.281.1830 ■ Fx: 951.281.1879
www.imperialrange.com ■ E-mail: imperialsales@imperialrange.com

 © 2007 Imperial Commercial Cooking Equipment All specifications subject to change without notice. Printed in the U.S.A.