Project #: _____

Item #: _____

AIA File #: _____

Specification #: _____

Mesquite Wood Broilers

Model MSQ-36 with gas log lighter shown with optional stand

Broiler Features

- Stainless steel front and sides.
- Welded stainless steel seams.
- One year parts and labor warranty.
- NSF listed.

Model Numbers

- ❏ MSQ-30
- ❏ MSQ-36
- ❏ MSQ-48
- ❏ MSQ-60

Mesquite Wood Char-Broiler Features

- Built-in gas log lighter burner eliminates the need for lighter fluids or electric starters.
- Burner may be used to start up wood, or when adding more wood during peak operating times.
- Broiler may use any type of wood or charcoal.
- Unique design incorporates an open grate bottom that allows a continuous updraft of air to optimize fuel combustion and save wood and charcoal costs.
- Burners are equipped with continuous pilots for instant ignition.
- 6" x 24" (152 x 610) cast iron grates give attractive broiling markings on meat, fish and poultry. Removes easily and safely for cleaning.
- Large stainless steel door and chute for easy access to wood or charcoal during operation.
- Full width, deep drip pan is removable for quick clean-up of ash and debris.
- Insulated throughout cooktop to conserve energy.
- No tools are needed to remove grates, radiant covers and stainless steel burners for cleaning.
- Stainless steel stands or 4" legs for counter installations are available.
- Heavy 10 gauge removable liner protects the interior from burning out.
- Constructed for durability with heavy gauge angle iron chassis.
- Available in 30", 36", 48" and 60" (762, 914,1219 and 1524) width models.

All measurements in ( ) are metric equivalents.

Imperial Commercial Cooking Equipment
1128 Sherborn Street ■ Corona, CA 92879 ■ 800.343.7790 ■ Ph: 951.281.1830 ■ Fx: 951.281.1879
www.imperialrange.com ■ E-mail: imperialsales@imperialrange.com

Imperial Mesquite Wood Broilers

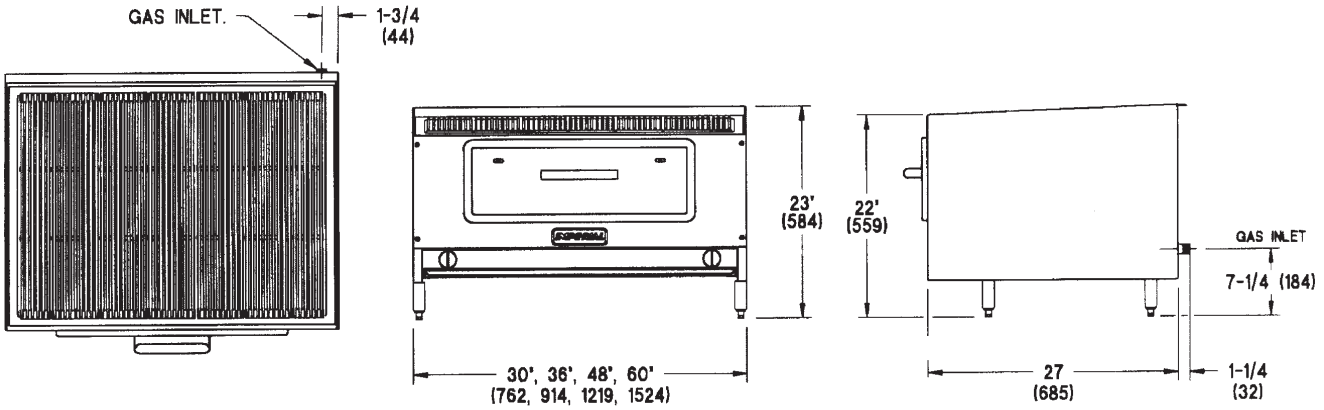

Mesquite Wood Broilers

Model#	Width	# of Gas Burners	# of Front Chutes	Total BTU	Total (KW)	Ship Weight (Kg.)	Ship Weight Lbs.	Stand Models	Ship Weight (Kg.)	Ship Weight Lbs.
MSQ-30	30" (762)	1	1	20,000	(6)	(132)	290	MSQS-30	(28)	70
MSQ-36	36" (1524)	1	1	25,000	(7)	(157)	345	MSQS-36	(32)	80
MSQ-48	48" (1219)	1	1	30,000	(9)	(184)	405	MSQS-48	(37)	90
MSQ-60	60" (1524)	2	2	40,000	(12)	(206)	455	MSQS-60	(41)	105

Crated Dimensions: 22" (559) h x 31" (788) d. Add 2½" (64) to width of unit.
All measurements in ( ) are metric equivalents.

Standard Exterior Specifications

Front and sides shall be stainless steel. Stainless steel seams shall be welded and finished. Chassis shall be angle iron for added durability. Control knobs shall be durable cast metal, polished chrome finish. Large stainless steel door with chute shall be located on the front of the broiler allowing easy loading and moving of wood and charcoal during operation.

Broiler Specifications

Burners shall have a built-in gas log lighter burner with adjustable gas valve. There shall be two burners standard on 60" (1524) (MSQ-60) model with one standing pilot per burner for instant ignition.

Top cooking grates shall be constructed of heavy duty cast iron in 6" x 24" (152 x 610) sections. Grates shall provide attractive broiler markings on food. Bottom cooking grates shall have an open bottom allowing a continuous updraft of air for optimal fuel combustion.

Drip pan shall be removable. Deep drip pan shall be located at the bottom for easy cleaning of ash and debris.

Removable liner shall be constructed of heavy 10 gauge to protect broiler interior from burning out. Removable liner shall be replaceable. No tools shall be required to remove top grates, bottom grates, burner and interior liner.

Gas: Manifold pressure is 5.0" W.C. for natural gas or 10.0" for propane gas. Manifold size ¾" NPT. ¾" pressure regulator supplied with equipment to be installed at time of connection. Specify type of gas and elevation if over 2000 ft. (610 m).

Clearance: For use only on non-combustible surfaces. Legs or stands are required for non-combustible floors. Provide 0" clearance from non-combustible surfaces and 8" (203) from combustible surfaces.

Optional Items:
- Top grate made of ½" (13) round rod
- Stainless steel open top cabinet stand
- Stainless steel flashing on 3 sides and 12" high above grill top
- 6" (152) casters (front two are locking) for stainless steel stands
- Gas shut off valve ¾" (19)
- 4" (102) stainless steel legs welded onto broiler
- Quick disconnect and flexible gas hose

Specification #: _____

AIA File #: _____

Imperial Commercial Cooking Equipment
1128 Sherborn Street ■ Corona, CA 92879 ■ 800.343.7790 ■ Ph: 951.281.1830 ■ Fx: 951.281.1879
www.imperialrange.com ■ E-mail: imperialsales@imperialrange.com

 © 2007 Imperial Commercial Cooking Equipment All specifications subject to change without notice. Printed in the U.S.A.