Project #: _____

Item #: _____

AIA File #: _____

Specification #: _____

Grooved Griddles
Thermostat Controlled
and Open Burner Combinations

Model IGG-36

Griddle Features

- Range match profile when placed on a refrigerated base or equipment stand.
- Stainless steel front, sides, and landing ledge.
- Welded stainless steel seams.
- Large 5" (127) stainless steel landing ledge.
- 4" (102) heavy duty stainless steel legs with adjustable feet.
- One year parts and labor warranty.
- AGA and CGA design certified, NSF and CE listed.

Model Numbers

Thermostat Controlled Griddles

❏ IGG-24 ❏ IGG-36
❏ IGG-48 ❏ IGG-60
❏ IGG-72

Thermostat Controlled Griddles with 2 Open Burner Combinations

❏ IGG-24-OB-2 ❏ IGG-36-OB-2
❏ IGG-48-OB-2 ❏ IGG-60-OB-2
❏ IGG-72-OB-2

Cook Top Features - Griddle Top

- Thermostat maintains selected griddle temperature during peak cooking periods.
- Aeration baffles between burners spreads heat across griddle for more even heating.
- Full width rear flue distributes heat uniformly across griddle surface.
- One burner every 12" (305), rated at 30,000 BTU/hr (9 kw) ea.
- Each burner has an adjustable gas valve and continuous pilot for instant ignition.
- Thick 1" (25) highly polished steel griddle plate maintains selected temperatures and assures quick recovery. Optional chrome griddle top also available.
- Grooved griddle gives the attractive char-broiled “look” without actually char-broiling.
- Full 24" depth plate for more cooking surface.
- Stainless steel grease trough, one piece rolled front.
- Large grease can with 1 gal. (3.8 L) capacity. Weep hole indicates when can is full.
- $3^1/_2$" (89) wide grease gutter.

Cook Top Features - Open Burner Combinations

- PyroCentric™ burner heads with two rings of flame for even cooking no matter the pan size.
- PyroCentric burners are 28,000 BTU/hr (8 KW) with a 7,000 BTU/hr. (2 KW) low simmer feature.
- Cast iron burners are anti-clogging and removable for easy cleaning.
- No gaskets or screws.
- Grates are in 12" x 12" (305 x 305) sections to easily lift off for cleaning.
- Anti-clogging shield designed in the grate protects the pilot from grease and debris.
- Pots slide easily from section to section.

All measurements in ( ) are metric equivalents.

Imperial Commercial Cooking Equipment
1128 Sherborn Street ■ Corona, CA 92879 ■ 800.343.7790 ■ Ph: 951.281.1830 ■ Fx: 951.281.1879
www.imperialrange.com ■ E-mail: imperialsales@imperialrange.com

Imperial Grooved Griddle Series

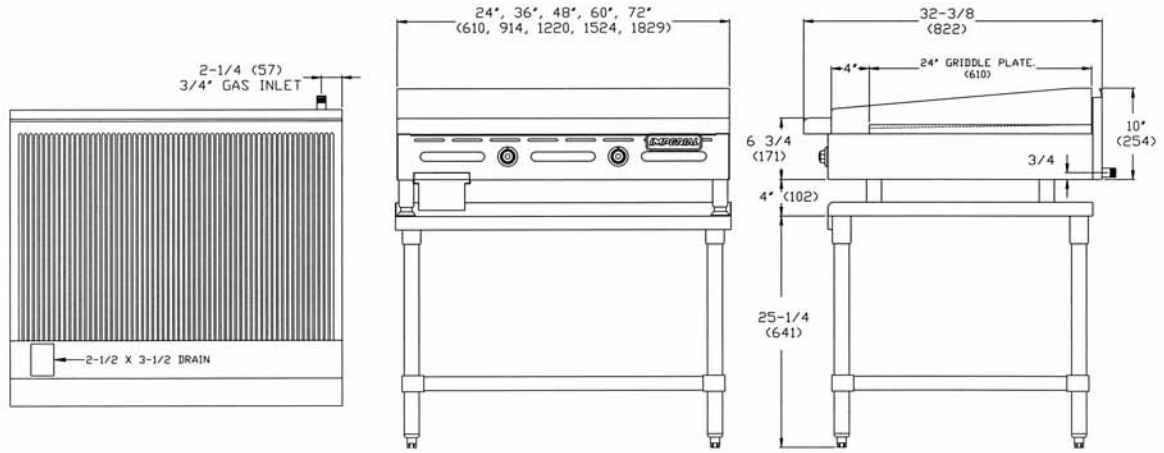

Model#	Griddle Width	Griddle Burners	Overall Width	Gas Output B.T.U.	(KW)	Ship Weight (Kg.)	Lbs.	Stand Model#	Ship Weight (Kg.)	Lbs.
Thermostat Controlled Griddles										
IGG-24	24" (610)	2	24" (610)	60,000	(18)	145	320	IGGS-24	23	50
IGG-36	36" (914)	3	36" (914)	90,000	(26)	195	430	IGGS-36	32	70
IGG-48	48" (1219)	4	48" (1219)	120,000	(35)	285	630	IGGS-48	39	85
IGG-60	60" (1524)	5	60" (1524)	150,000	(18)	340	750	IGGS-60	48	105
IGG-72	72" (1829)	6	72" (1829)	180,000	(18)	404	890	IGGS-72	62	135
Thermostat Controlled Griddles with (2) Open Burner Combinations										
IGG-24-OB-2	24" (610)	2	36" (914)	116,000	(34)	159	350	IGGS-36	32	70
IGG-36-OB-2	36" (914)	3	48" (1219)	146,000	(43)	222	490	IGGS-48	39	85
IGG-48-OB-2	48" (1219)	4	60" (1524)	176,000	(52)	288	635	IGGS-60	48	105
IGG-60-OB-2	60" (1524)	5	72" (1829)	206,000	(60)	355	785	IGGS-72	62	135
IGG-72-OB-2	72" (1829)	6	84" (2134)	236,000	(69)	423	935	IGGS-84	77	170

Note: Add "OB-4" to model number and 24" (610) to overall width for 4 Open Burner/Griddle Combination.
Open burners are located on right side unless specified.

Crated Dimensions: Height =14" (356) Depth = 36" (914) Width: add 2½" (64) to Griddle width.

Standard Exterior Specifications

Front, ledge, grease trough, splash guard and sides shall be stainless steel with welded and finished stainless steel seams. Control knobs shall be durable cast metal with a polished chrome finish. Legs shall be 4" (102) stainless steel with adjustable feet.

Griddle Top Specifications

Griddle burner shall be 30,000 BTU/hr. (9 KW) "U" type located every 12" (305) for even cooking. Burner shall have one adjustable gas valve and standing pilot per burner. Aeration baffles shall be installed between burners and a full width rear flue shall be included to ensure a uniform griddle surface temperature. Thermostat shall maintain selected griddle temperature during peak cooking periods. Griddle plate shall be 1" (25) thick, highly polished plate with sloping grooves providing attractive markings on meat, fish and poultry. No breaking-in shall be required for griddle plate. Griddle plate shall be 24" (610) deep. Unit shall have a stainless steel 4" (102) high tapered splash guard. Grease trough shall be 3½" (89) wide for easy cleaning. Removable grease can shall have a 1 gal. (3.8 L) capacity and a weep hole to indicate when can is full.

2 Open Burner Top Specifications

Open Burners shall be 28,000 BTU/hr. (8 KW) lift-off PyroCentric™ burner heads with no gaskets and no screws. There shall be one standing pilot for each burner. Top Grates shall be constructed in 12" x 12" (305 x 305) lift-off sections and be made of heavy-duty cast iron. Cast-in bowl shall direct heat upward. Top grate design shall include an integrated pilot shield.

Gas: Manifold pressure is 5.0" W.C. for natural gas or 10.0" for propane gas. Manifold size ¾" NPT. ¾" pressure regulator supplied with equipment to be installed at time of connection. Specify type of gas and elevation if over 2000 ft. (610 m).

Clearance: For use only on non-combustible floors. Legs or casters are required for non-combustible floors. Provide 0" clearance from non-combustible surfaces and 8" (203) from combustible surfaces.

Optional Items

■ Griddle safety valve ■ Gas shut off valve ¾" (19)
■ Quick disconnect and flexible gas hose ■ Stainless steel stands
■ 6" (152) casters for equipment stands ■ Integrated refrigerated base (see Sizzle 'n Chill specification sheet).

Combination Optional Items

■ Saute burner head ■ Wok burner head ■ 10" (254) stainless steel wok ring

Specification #: _____

AIA File #: _____

Imperial Commercial Cooking Equipment
1128 Sherborn Street ■ Corona, CA 92879 ■ 800.343.7790 ■ Ph: 951.281.1830 ■ Fx: 951.281.1879
www.imperialrange.com ■ E-mail: imperialsales@imperialrange.com

 © 2007 Imperial Commercial Cooking Equipment All specifications subject to change without notice. Printed in the U.S.A.