ITEM NO. _____

F-58 COUNTERTOP AUTOLIFT FRYER

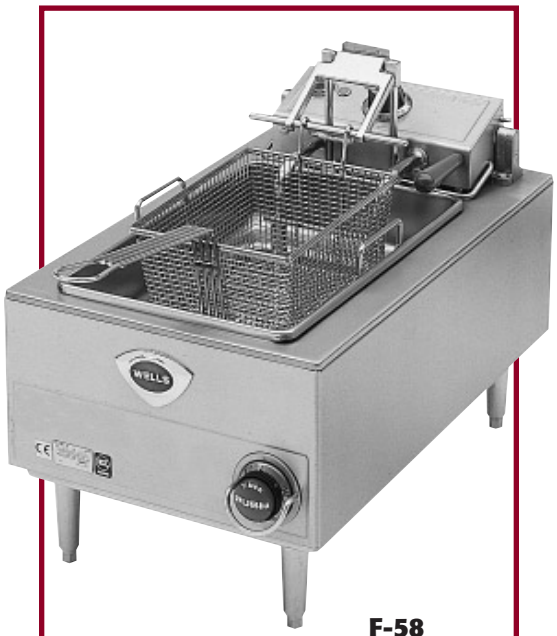

F-58

Wells F-58 Autolift Fryer is one of the most durable and easy-to-use fryers in the industry. A swing-up element allows the frypot to be removed for easy cleaning. The low watt density heating element provides extended oil life.

Features

- The autolift fryer has an **adjustable one to fifteen minute push-button timer** that automatically lifts the fry basket from oil.
- **One full-size, rear-hanging fry basket** is included with every fryer.
- **Swing-up element,** located below the fry basket, is heavy-duty stainless steel with a low watt density for longer oil life.
- **Element frame assembly** has a spring-loaded support rod to secure element when in a raised position.
- **Deep-drawn, removable frypot** is made of nickel-plated steel and can hold up to fifteen pounds of oil.
- **A manual reset safety thermostat** will shut off the heating element power and illuminate the signal light if an over-temperature condition is reached.
- **Temperature Control System (TCS),** includes a positive-off precision thermostat to assure quick recovery.
- **The F-58 Fryer** is Underwriters Laboratories, Inc. LISTED and meets NSF International and Canadian standards.
- **A one-year warranty** against defects covers parts and labor.

Specifications

Overall Dimensions:	Inches	MM
Width	14 3/4	375
Depth	23 1/2	597
Height (incl. 4" legs)	16 3/8	416
Oil Capacity:	**Lbs.**	**KG**
F-58	15	7
Temperature Range:	**Fahrenheit**	**Celsius**
F-58	275° to 375°	135° to 191°
Pre-Heat Time to 350° F:	4 1/2 minutes	
Watts Per Hour to Maintain 350° F:		450
Typical Production:	**Per Hour**	
French Fries *2 oz. servings*	300	
Chicken *pounds*	20	
Weights:	**Lbs.**	**KG**
Installed	42	19
Shipping	48	22

Export

The following model is available for export and meets the standards for **CE:**

- **F-58EU,** STS, 380-415V, 3Ø, 5.8 KW

Accessories / Options

Legs, set of four, metal, 4" adjustable, 20563

Basket, half-size (2 per fry pot), 20161

Basket, full size (1 per fry pot), 20162

Crumb Cradle, 20690

Fry Pot Cover, 21010

Tundra Specialties

LISTED E6070 | STD.4 | LR 10836 | EXPORT MODELS ONLY

MODEL F-58 AUTOLIFT FRYER

DIMENSIONS:

INCH / (MM)

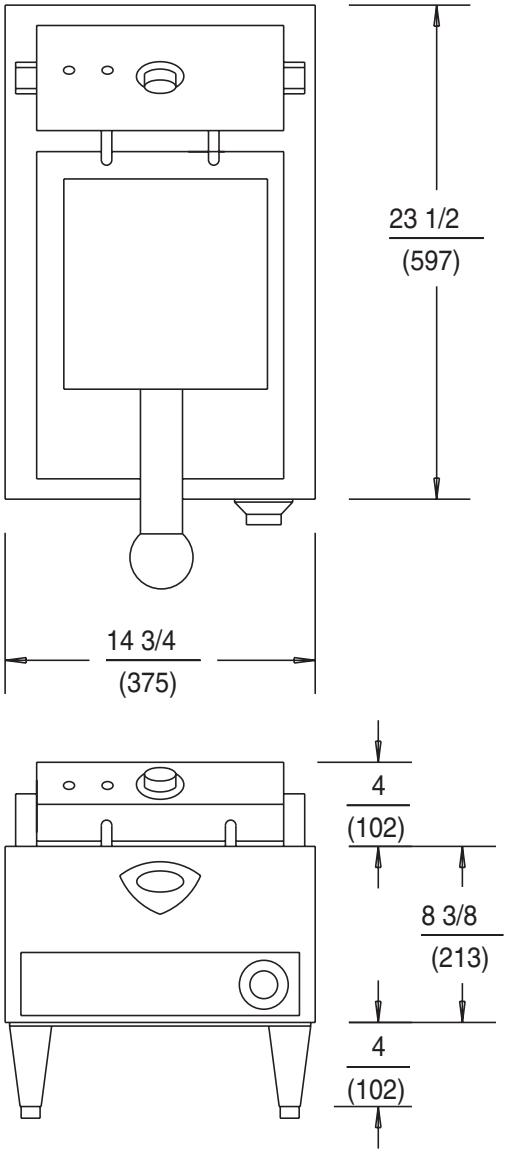

MINIMUM CLEARANCE REQUIRED FROM UNIT TO THE NEAREST SURFACE			
BACK	SIDE	BOTTOM	FRONT
NA / NA	NA / NA	NA / NA	40 / (1016)

NOTE: Depending on the installation, clearances can be reduced upon further evaluations to UL standards.

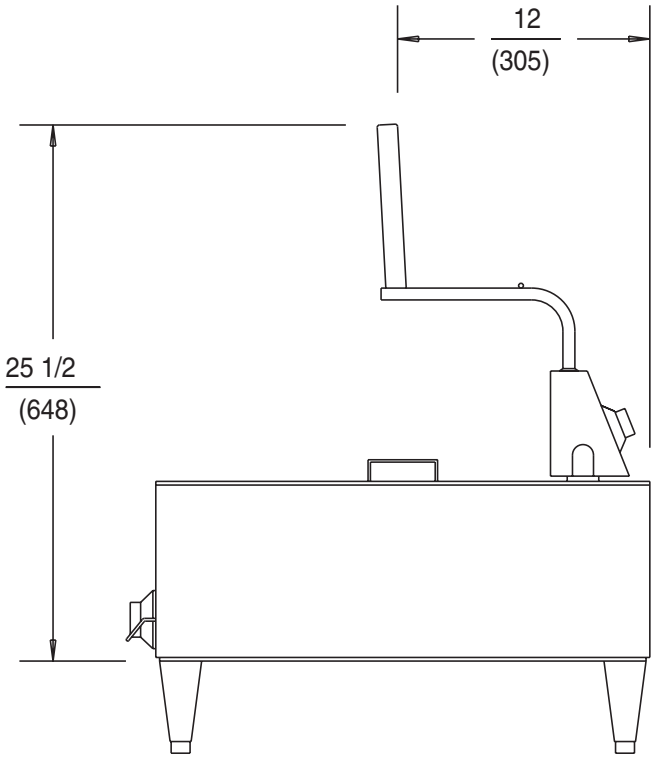

F-58 ELECTRICAL SPECIFICATIONS:

MODELS	VOLTS	WATTS	AMPS PER LINE PHASE 3				AMPS SINGLE PHASE	POWER SUPPLY CORD
			L1	L2	L3	N		
F-58	208	5750	-	-	-	-	27.6	NONE
F-58	240	5750	-	-	-	-	24.0	NONE
F-58EU	380-415	5800	9.0	8.0	8.0	1.0	-	NONE

Denotes export (EU) products.

NOTE: Specifications are subject to change without notice.

WELLS MANUFACTURING COMPANY
2 ERIK CIRCLE, PO BOX 280, VERDI, NV 89439 U.S.A. • USA PHONE: (775) 689-5700 • FAX: (775) 689-5972
FOR ORDERS ONLY: (888) 356-5362 • FAX: (800) 356-5142 • www.wellsbloomfield.com
© 2001 WELLS MANUFACTURING • PRINTED IN THE U.S.A. • 04/01 • REV(I) • PART NO. 37064