ITEM NO. _____

G-19 GRIDDLE

G-19

Wells Griddle G-19 is ideal for any kitchen based on its versatile, easy-to-use design. In addition to the standard grill surface there are two options to choose from, grooved or chrome-plated. The two positive-off thermostats allow individual zone control. The oversize grease drawer is easily removable for cleaning.

Features

- **Each individual thermostat** controls a seventeen-inch wide cooking surface.
- **Enclosed tubular elements** are clamped onto the griddle plate to provide even heat distribution over the entire surface.
- **Splashguard** makes clean-up easier by preventing grease and food products from leaving the cooking area.
- **An extra-large, removable, front-grease drawer** has a capacity of four quarts.
- **Controls** are front-mounted with a protective guard ring to help prevent accidental temperature changes.
- **A terminal block** is provided for field connection to the main power supply.
- **The G-19 Griddle** is Underwriters Laboratories, Inc. LISTED and meets the National Sanitation Foundation and Canadian standards.
- **A one-year warranty** against defects covers parts and labor.

Accessories / Options

Chrome-plated griddle surface, 50 microns thick

Grooved griddle surface, 3/4-inch thick ribbed steel plate that allows for the "branding" of meat products

Specifications

Overall Dimensions:	Inches	MM
Width	36 1/2	927
Depth	23 9/16	598
Height (incl. 4" legs & splashguard)	16	406
Grid Surface Dimensions:		
Width	34 1/4	870
Depth	18 5/16	465
Area	625 in^2	.40 m^2
Temperature Range:	**Fahrenheit**	**Celsius**
G-19	200º to 450º	93º to 232º
Number of Thermostats:		2
Pre-Heat Time to 400˚ F:		9 minutes
Watts Per Hour to Maintain 400˚ F:		1,700
Typical Production:	**Per Load**	**Per Hour**
Hamburgers	48	720
Steaks	18	220
Pancakes*	35	500
Eggs*	45	675
* Not applicable to grooved surface		
Weights:	**Lbs.**	**KG**
Installed	159	72
Shipping	190	86

Export

The following models are available for export and meet the standards for CE:

- G-19EU, 19MM-thick plate, 380-415V, 3NAC, 16.1 KW, 50˚ to 275˚ C thermostats, shipping weight is 86 KG
- PG-19EU, chrome plate 19MM-thick plate, 380-415V, 3NAC, 16.1 KW, 50˚ to 275˚ C thermostats, shipping weight is 102 KG

LISTED E6070 | STD.4 | LR 10836 | EXPORT MODELS ONLY

MODEL G-19 GRIDDLE

DIMENSIONS: INCH (MM)

MINIMUM CLEARANCE REQUIRED FROM UNIT TO THE NEAREST COMBUSTIBLE OBJECT.			
BACK	SIDE	BOTTOM	TOP
1 (25)	1 (25)	4 (102)	NA NA

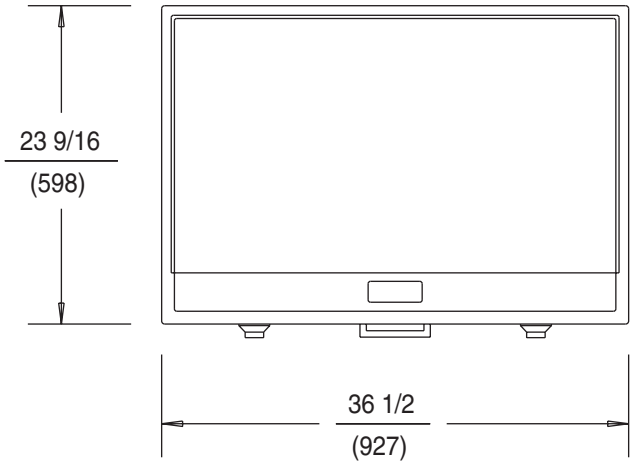

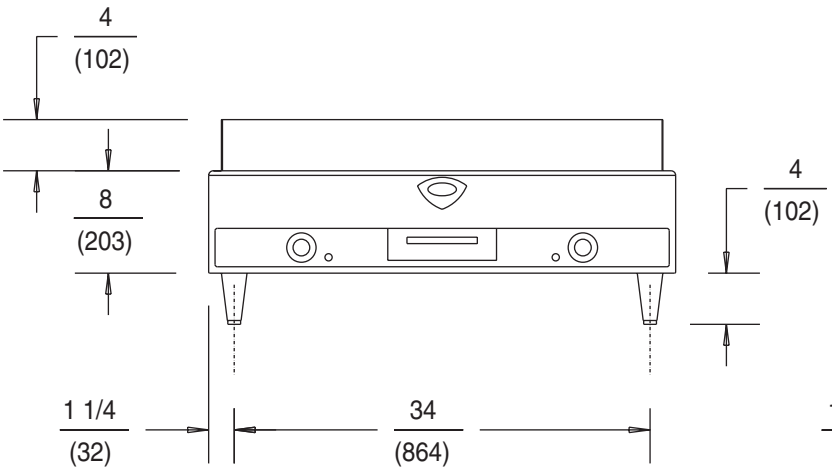

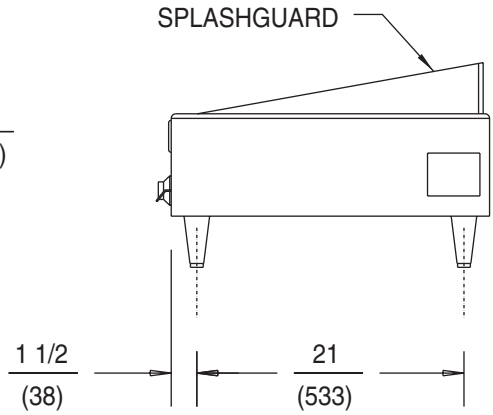

G-19 ELECTRICAL SPECIFICATIONS:

MODELS	VOLTS	WATTS	AMPS PER LINE PHASE 3				AMPS SINGLE PHASE	POWER SUPPLY CORD
			L1	L2	L3	N		
G-19	208	12000	28.8	49.9	28.8	NA	57.6	NONE
G-19	240	12000	25.0	43.3	25.0	NA	50.0	NONE
G-19EU	380-415	16100	22.5	22.5	22.5	0	NA	NONE
G-19	480	12000	12.5	NA	25.0	NA	25.0	NONE

Denotes export (EU) products.

NOTE: Specifications are subject to change without notice.

WELLS MANUFACTURING COMPANY
2 ERIK CIRCLE, PO BOX 280, VERDI, NV 89439 U.S.A. • USA PHONE: (775) 689-5700 • FAX: (775) 689-5972
FOR ORDERS ONLY: (888) 356-5362 • FAX: (800) 356-5142 • www.wellsbloomfield.com
A SPECIALTY EQUIPMENT COMPANY • 2000 WELLS MANUFACTURING • PRINTED IN THE U.S.A. • 7/00 • REV(G) • PART NO. 38855

Tundra Specialties