ITEM NO. _____

G-24 GRIDDLE

G-24

Wells G-24 Griddle is ideal for any commercial kitchen based on its versatile, easy-to-use design. In addition to the standard griddle surface there are two options to choose from, grooved or chrome-plated. The four positive-off thermostats allow individual zone control.

Specifications

Overall Dimensions:	Inches	MM
Width	49	1,245
Depth	29 9/16	751
Height (incl. 4" legs & splashguard)	16	406
Grid Surface Dimensions:		
Width	46 7/8	1,191
Depth	24 5/16	618
Area	1140 in^2	.73 m^2
Temperature Range:	**Fahrenheit**	**Celsius**
G-24	200° to 450°	93° to 232°
Number of Thermostats:		4
Pre-Heat Time to 400˚ F:		9 minutes
Watts Per Hour to Maintain 400˚ F:		2,900
Typical Production:	**Per Load**	**Per Hour**
Hamburgers	86	1,450
Steaks	32	400
Pancakes*	66	950
Eggs*	70	1,190
* Not applicable to grooved surface		
Weights:	**Lbs.**	**KG**
Installed	244	111
Shipping	326	148

Export

The following models are available for export and meet the standards for **CE:**

- **G-24EU,** 380-415V, 3NAC, 21000 watts
- **PG-24EU,** chrome plated, 380-415V, 3NAC, 21000 watts

Features

- **Each individual thermostat** controls an eleven and one half-inch wide cooking surface.
- **Enclosed tubular elements** are clamped onto the griddle plate to provide even heat distribution over the entire surface.
- **Removable splashguard** makes clean up easier.
- **The removable front grease drawer** has a four-quart capacity.
- **Controls** are mounted with a protective guard ring to help prevent accidental temperature changes.
- Each unit is provided with **4" adjustable legs.**
- **A terminal block** is provided for field connection to the main power supply.
- **The G-24 Griddle** is Underwriters Laboratories, Inc. LISTED and meets NSF International and Canadian standards.
- **A one-year warranty** against defects covers parts and labor.

Accessories / Options

Chrome-plated griddle surface, allows more efficient heat transfer throughout the cooking area, available by special order

Grooved griddle surface, 3/4-inch thick ribbed steel plate that allows for the "branding" of meat products, available by special order

LISTED E6070 | STD.4 | LR 10836 | EXPORT MODELS ONLY

MODEL G-24 GRIDDLE

DIMENSIONS:

INCH / (MM)

MINIMUM CLEARANCE REQUIRED FROM UNIT TO THE NEAREST SURFACE		
BACK	SIDE	BOTTOM
1 / (25)	1 / (25)	4 / (102)

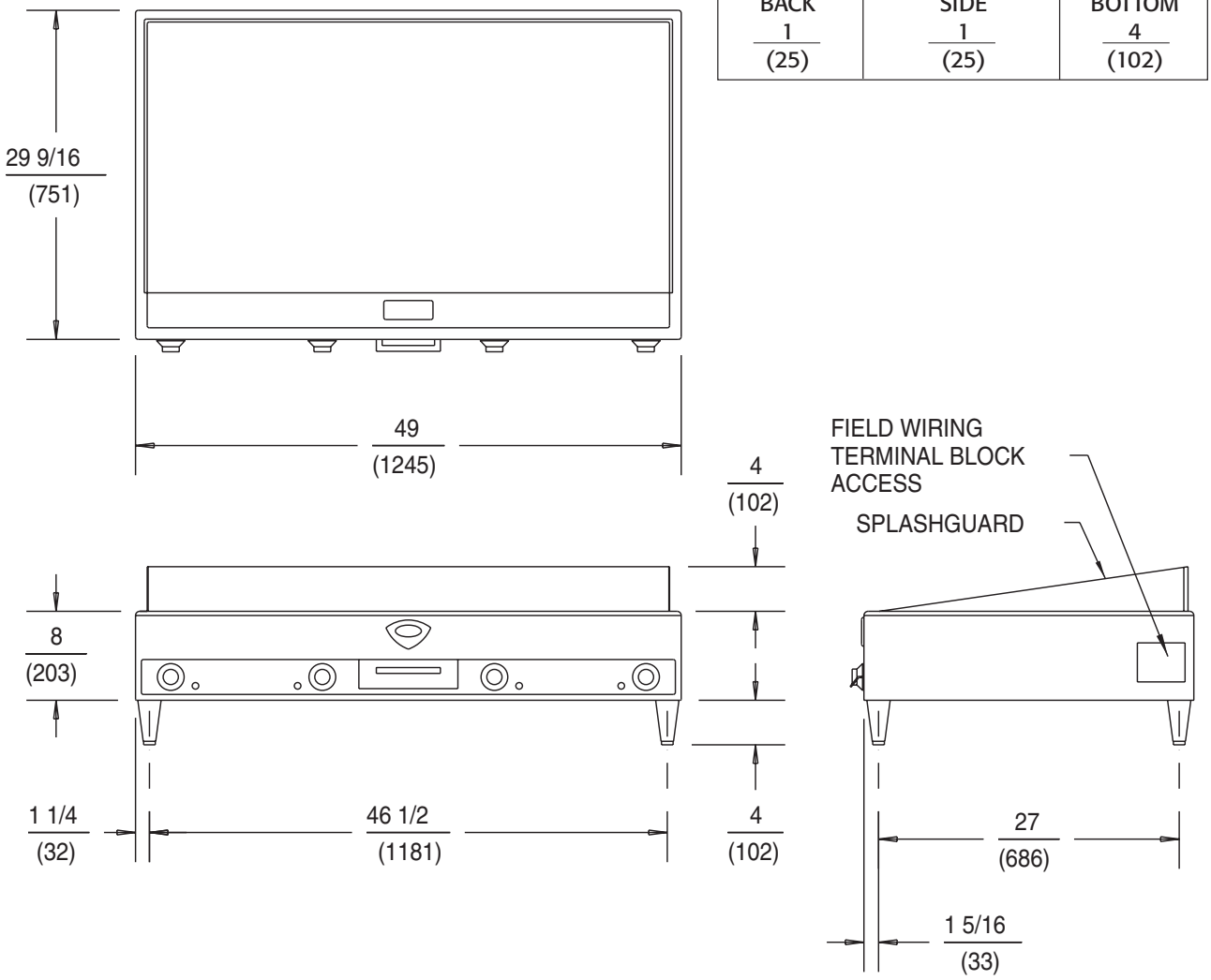

G-24 ELECTRICAL SPECIFICATIONS:

MODELS	VOLTS	WATTS	AMPS PER LINE PHASE 3				AMPS SINGLE PHASE	POWER SUPPLY CORD
			L1	L2	L3	N		
G-24	208	21500	63.4	67.1	45.8	–	103.3	NONE
G-24	240	21500	55.0	58.3	39.6	–	89.5	NONE
G-24	480	21500	27.1	28.9	19.9	–	43.8	NONE
G-24EU	380-415	21000	20.8	41.7	25.0	50.6	–	NONE

Denotes export (EU) products.

NOTE: Specifications are subject to change without notice.

WELLS MANUFACTURING COMPANY
2 ERIK CIRCLE, PO BOX 280, VERDI, NV 89439 U.S.A. • USA PHONE: (775) 689-5700 • FAX: (775) 689-5972
FOR ORDERS ONLY: (888) 356-5362 • FAX: (800) 356-5142 • www.wellsbloomfield.com
© 2001 WELLS MANUFACTURING • PRINTED IN THE U.S.A. • 2/01 • REV(F) • PART NO. 38857