ITEM NO. _____

B-40 CHAR BROILER

B-40

Wells B-40 Countertop Broiler has a stainless steel top and sides that make this broiler one of the most durable in the industry. Self-cleaning elements are protected by the heavy-duty cast-iron grate and provide two heat zones for flexibility in broiling.

Specifications

Overall Dimensions:	Inches	MM
Width	24 3/4	629
Depth	23 1/2	597
Height (incl. 4" legs)	15 3/8	391
Grid Surface Dimensions:		
Width	21 1/2	546
Depth	14 1/2	368
Area	312 in^2	0.20 m^2
Temperature Settings:	OFF/LO to HI	
Number of Controls:	2	
Pre-Heat Time to 600° F:	10 minutes	
Typical Production	**Per Load**	**Per Hour**
Hamburgers	24	336
Steaks	9	81
Weights:	**Lbs.**	**KG**
Installed	76	34
Shipping	80	36

Accessories / Options

Cordset, 240V, 30 AMP, 1Ø, NEMA 6-30P, 20141

Features

- **Each self-cleaning element** is positioned between the broiler grate ribs to protect against direct food contact and spatula abrasion. The elements also provide dual heating action (conductive and radiant).
- **Temperature** is regulated by infinite controls that have a positive-off position and signal lights to indicate a power-on condition.
- **Element frame** has a spring-loaded support rod to secure element when in a raised position.
- **Lift-out, drawn drip pans with handles** and removable **cast iron grates** allow fast and easy cleaning.
- **Individual controls** regulate one half of the grid surface area for cooking versatility and are mounted with a protective guard ring to help prevent accidental temperature changes.
- **A terminal block** is provided for field connection to the main power supply.
- Each unit is provided with a **grate scraper/brush and 4" adjustable metal legs.**
- **The B-40 Broiler** is Underwriters Laboratories, Inc. LISTED and meets NSF International standards.
- **A one-year warranty** against defects covers parts and labor.

LISTED E6070 STD.4 E6070

MODEL B-40 CHAR BROILER

DIMENSIONS:

INCH / (MM)

MINIMUM CLEARANCE REQUIRED FROM UNIT TO THE NEAREST COMBUSTIBLE OBJECT.			
BACK	SIDE	BOTTOM	TOP
6 (152)	7 (178)	4 (102)	21 (533)

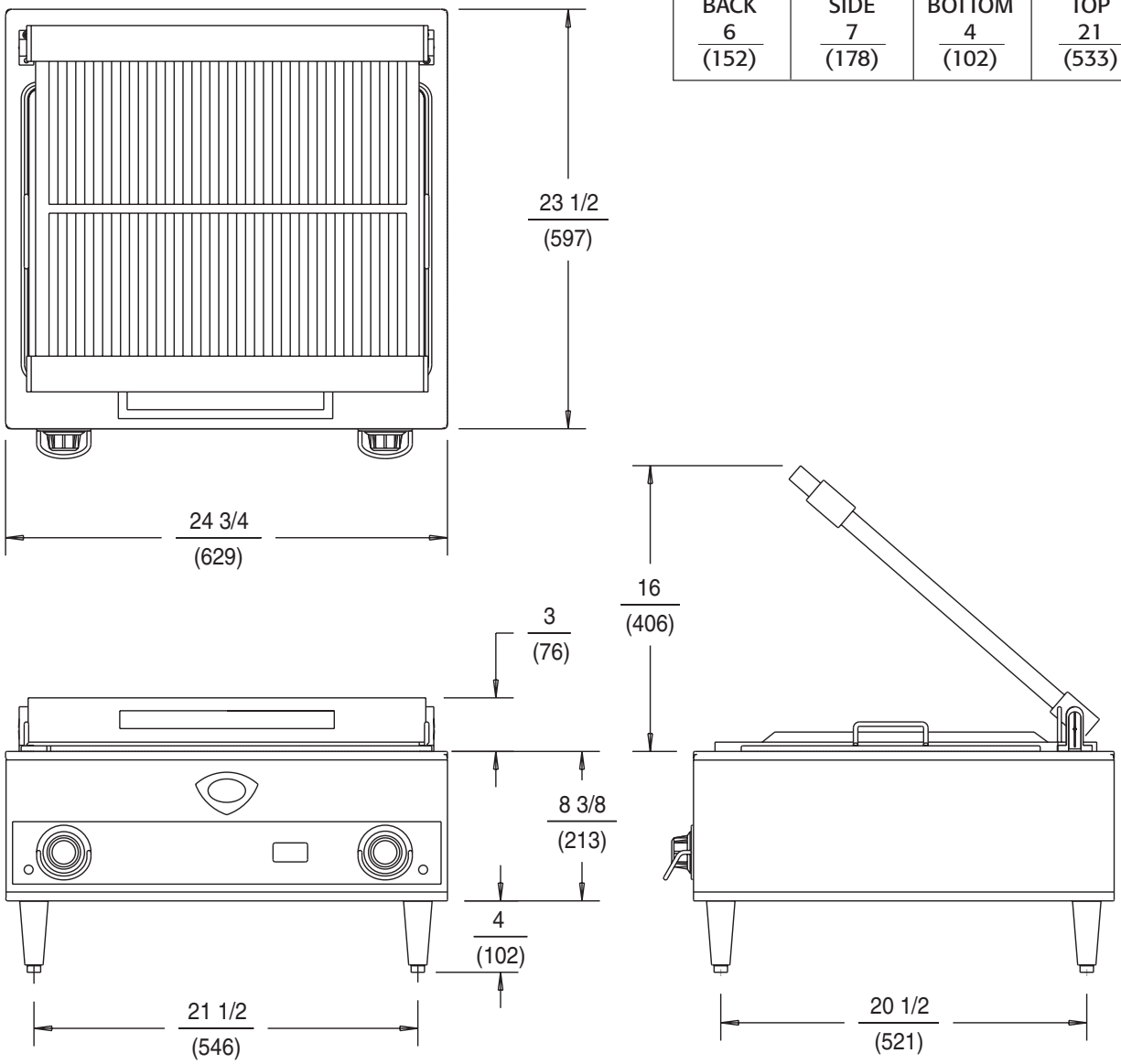

B-40 ELECTRICAL SPECIFICATIONS:

MODELS	VOLTS	WATTS	AMPS PER LINE PHASE 3				AMPS SINGLE PHASE	POWER SUPPLY CORD
			L1	L2	L3	N		
B-40	208	5400	12.9	12.9	22.4	–	26.0	NONE
B-40	240	5400	11.2	11.2	11.2	–	22.5	NONE

NOTE: Specifications are subject to change without notice.

WELLS MANUFACTURING COMPANY
2 ERIK CIRCLE, PO BOX 280, VERDI, NV 89439 U.S.A. • USA PHONE: (775) 689-5700 • FAX: (775) 689-5972
FOR ORDERS ONLY: (888) 356-5362 • FAX: (800) 356-5142 • www.wellsbloomfield.com
2001 WELLS MANUFACTURING • PRINTED IN THE U.S.A. • 2/01 • REV(D) • PART NO. 37086