ITEM NO. _____

B-44 CHAR BROILER

B-44

Wells B-44 Countertop Broiler has a stainless steel top and sides, making it one of the most durable in the industry. The self-cleaning element is protected by a heavy-duty cast-iron grate and provides dual heating action, using both conductive and radiant heat.

Specifications

Overall Dimensions:	Inches	MM
Width	19 7/16	494
Depth	29 9/16	751
Height (incl. 4" legs)	15 3/8	391
Grid Surface Dimensions:		
Width	16	406
Depth	20	508
Area	320 in^2	0.21 m^2
Temperature Settings:	OFF/LO to HI	
Number of Controls:	1	
Pre-Heat Time to 600° F:	10 minutes	
Typical Production	**Per Load**	**Per Hour**
Hamburgers	25	350
Steaks	9	81
Weights:	**Lbs.**	**KG**
Installed	80	36
Shipping	85	39

Export

The following model is available for export and meets the standards for CE:

B-44EU, 380-415V, 3Ø, 5400 watts

Features

- **The self-cleaning element** is positioned between the broiler grate ribs to protect against direct food contact and spatula abrasion. The element also provides dual heating action (conductive and radiant).
- **Temperature** is regulated by an infinite control that has a positive-off position and a signal light to indicate a power-on condition.
- **Element frame** has a spring-loaded support rod to secure element when in a raised position.
- **Lift-out, drawn drip pan with handles** and removable **cast iron grate** allow fast and easy cleaning.
- **Control** is mounted with a protective guard ring to help prevent accidental temperature changes.
- **A terminal block** is provided for field connection to the main power supply.
- Each unit is provided with a **grate scraper/brush and 4" adjustable metal legs.**
- **The B-44 Broiler** is Underwriters Laboratories, Inc. LISTED and meets NSF International standards.
- **A one-year warranty** against defects covers parts and labor.

Accessories / Options

Cordset, 240V, 30 AMP, 1Ø, NEMA 6-30P, 20141

LISTED E6070 | STD.4 | E6070 | EXPORT MODELS ONLY

MODEL B-44 CHAR BROILER

DIMENSIONS: INCH (MM)

MINIMUM CLEARANCE REQUIRED FROM UNIT TO THE NEAREST SURFACE.			
BACK	SIDE	BOTTOM	TOP
6 (152)	7 (178)	4 (102)	30 (762)

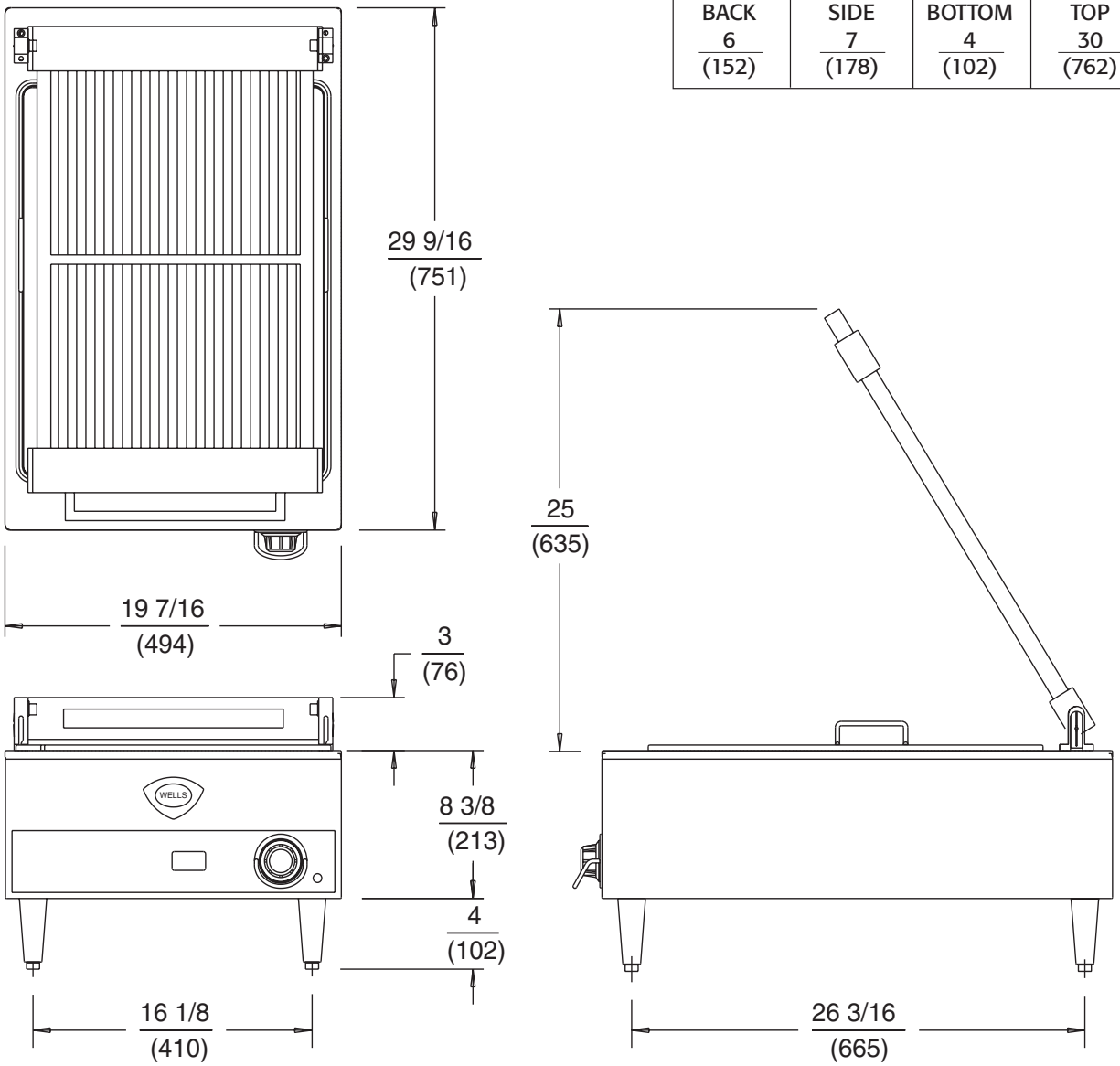

B-44 ELECTRICAL SPECIFICATIONS:

MODELS	VOLTS	WATTS	AMPS PER LINE PHASE 3				AMPS SINGLE PHASE	POWER SUPPLY CORD
			L1	L2	L3	N		
B-44	208	5400	11.5	22.4	14.4	–	26.0	NONE
B-44	240	5400	10.0	19.5	12.5	–	22.5	NONE
B-44EU	380-415	5400	7.6	7.6	7.6	–	–	NONE

Denotes export (EU) products.

NOTE: Specifications are subject to change without notice.

WELLS MANUFACTURING COMPANY
2 ERIK CIRCLE, PO BOX 280, VERDI, NV 89439 U.S.A. • USA PHONE: (775) 689-5700 • FAX: (775) 689-5972
FOR ORDERS ONLY: (888) 356-5362 • FAX: (800) 356-5142 • www.wellsbloomfield.com
2001 WELLS MANUFACTURING • PRINTED IN THE U.S.A. • 2/01 • REV(D) • PART NO. 37087

Tundra Specialties