ITEM NO. _____

BWB-1S BELGIAN WAFFLE BAKER

Wells BWB-1S Belgian waffle baker is designed to cook Belgian-style waffles quickly and easily. Its rotating feature allows the batter to evenly fill the grids. A self-activating timer assures consistent waffle color.

Features

- **Elements are cast into the upper and lower grids** to provide superior temperature uniformity.
- **A solid-state temperature controller** regulates the elements.
- **Grids** are seven-inch diameter, one-half inch deep cast aluminum.
- **Stainless steel shell** provides maximum strength and durability.
- **Solid-state, self-activating timer** with buzzer indicates end of cooking cycle.
- **ON/OFF toggle switch** is located on the front of the unit and is protected by a stainless steel guard. An indicator light will illuminate when cooking cycle is on.
- **Die-stamped stainless steel drip tray** removes easily for cleaning.
- **Handle** is nickel-plated steel with an open-coil design and heat-resistant coating.
- The BWB-1S waffle baker is **Underwriters Laboratories, Inc. LISTED** and meets **NSF** International standards.
- **A one-year warranty** against defects covers parts and labor.

Specifications

Dimensions:	Inches	MM
Width	10 1/8	257
Depth	14	356
Height	10 5/8	270
Pre-Heat Time:	20 min.	
Typical Production:	Per Hour	
Waffles	20	
Weights:	Lbs.	KG
Installed	167	75
Shipping	217	98

Accessories / Options

Replacement drip tray, 21107

LISTED
E6070

STD.4

MODEL
BWB-1S
BELGIAN WAFFLE BAKER

DIMENSIONS: INCH / (MM)

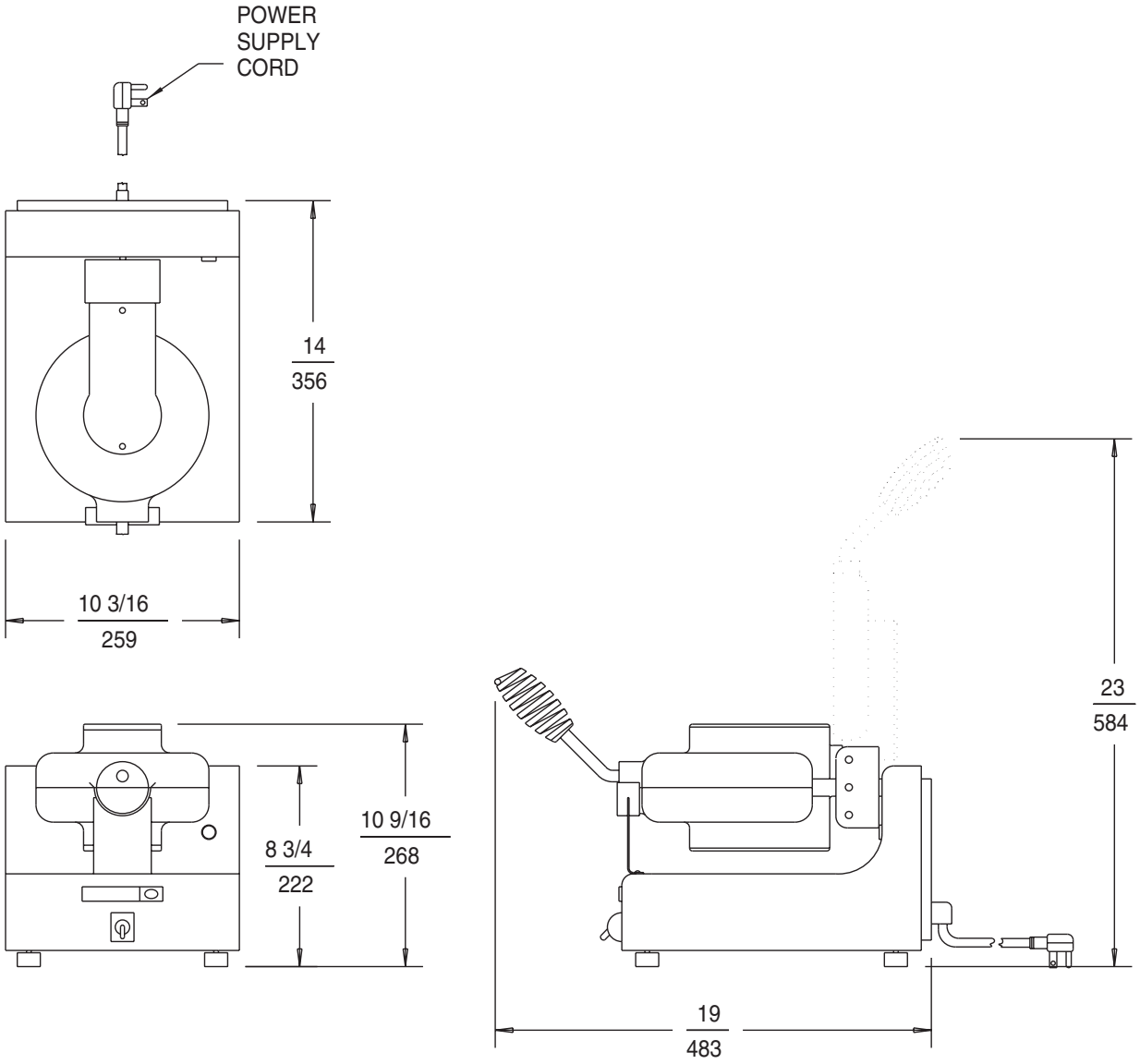

BWB-1S ELECTRICAL SPECIFICATIONS:

MODELS	VOLTS	WATTS	AMPS	POWER SUPPLY CORD
BWB-1S	120	900	7.5	NEMA-15P

NOTE: Specifications are subject to change without notice.

WELLS MANUFACTURING COMPANY
2 ERIK CIRCLE, PO BOX 280, VERDI, NV 89439 U.S.A.
USA PHONE: (775) 689-5700 • FAX: (775) 689-5972
FOR ORDERS ONLY: (888) 356-5362 • FAX: (800) 356-5142
www.wells-mfg.com
© 2002 WELLS MANUFACTURING • PRINTED IN THE U.S.A.
05/02 • REV(B) • PART NO. 44666

WELLS