GAS COUNTERTOP HEAVY DUTY GRIDDLES

HDG-2430G, HDG-3630G & HDG-4830G

(HDG-3630G Shown)

Wells Gas Countertop Heavy Duty Griddles are designed for use with either natural or LP gas. Griddles are factory configured for natural gas and are field convertible to LP gas.

Features

- 300 series stainless steel housing with removable front panel to provide easy access to components.
- Griddle surface is a 3/4" thick, steel plate for even heat distribution, ideal for commercial kitchens.
- Removable, large capacity stainless steel drip drawer provides easy clean-up.
- Each burner has an adjustable air shutter to control primary air and provide optimum combustion.
- Each burner has ON/OFF control valves that provide infinite heat adjustment.
- Heavy duty 4" steel legs.
- Meets ANSI Z83 and NSF International standards.
- One year warranty covers parts and labor.

Specifications

Overall Dimensions	Inches	MM
All Models:		
Depth	31 11/16	804
Height (incl. 4" legs)	17	433
Width:		
HDG-2430G	24 1/8	613
HDG-3630G	36 1/8	917
HDG-4830G	48 1/8	1222
Temperature Settings:	OFF/LO to HI	
Number of burners:	2, 3, or 4	
Weights	Lbs.	KG
HDG-2430G Installed	199	90
Shipping	249	113
HDG-3630G Installed	287	130
Shipping	396	180
HDG-4830G Installed	393	178
Shipping	507	230

Accessories/Options

20563 Legs, set of 4, 4" adjustable nickel plated alloy

2 Erik Circle · Verdi, Nevada 89439 · USA
Tel. 775-689-5700 · Fax Orders · 800-356-5142 · www.WellsBloomfield.com
© 2007 Wells Bloomfield · Printed in the U.S.A. · 07/07 · No. 307037 (-) ECN-13129

STD.4

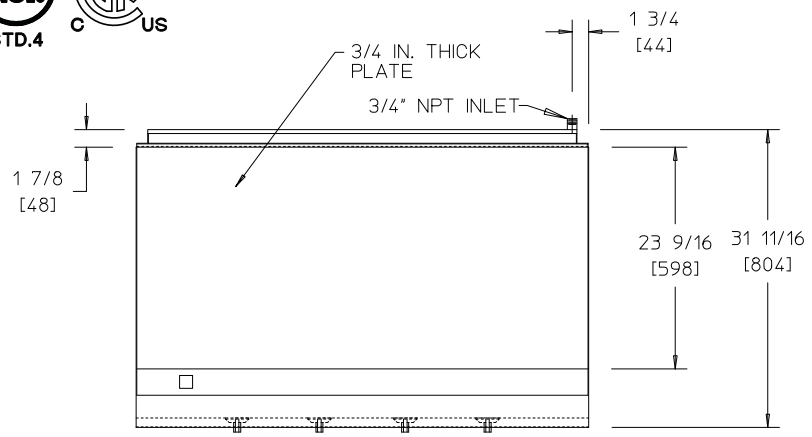

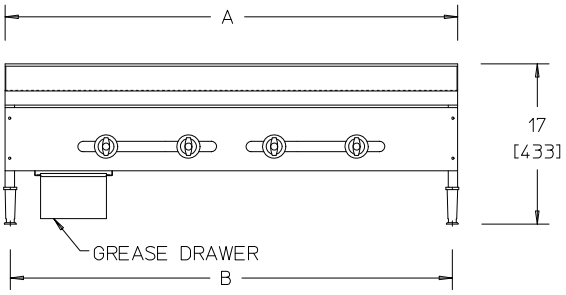

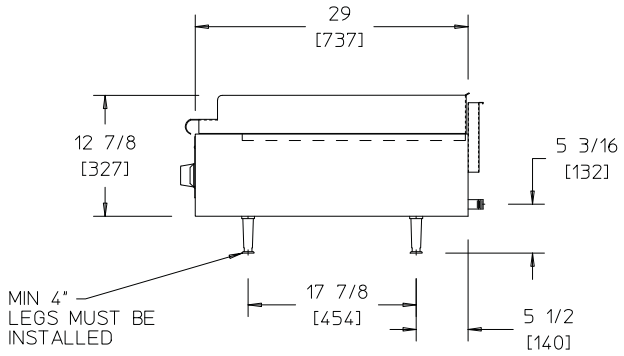

DIMENSIONS: INCH [MM]

NOTE: Specifications are subject to change without notice and are not intended for installation purposes. See installation instructions at www.wellsbloomfield.com prior to installing unit.

	BTU RATING		DIMENSION	
	NATURAL	L.P. GAS		
MODEL	GAS 5" W.C.	10" W.C.	"A"	"B"
HDG-2430G	60,000	60,000 *	24 1/8 [613]	23" [584]
HDG-3630G	90,000	90,000 *	36 1/8" [917]	35" [889]
HDG-4830G	120,000	120 000*	48 1/8" [1222]	47" [1194]

*** PROPANE CONVERSION KIT INCLUDED WITH EACH GRIDDLE**

MINIMUM CLEARANCE FROM NON–COMBUSTIBLE SURFACES			
BACK	SIDE	BOTTOM	FRONT
0 [0]	0 [0]	4 [102]	0 [0]

Wells Bloomfield
2 Erik Circle, P.O. Box 280, Verdi, Nevada 89439 U.S.A.
U.S.A.: (775) 689-5700 · (888) 356-5362 · **Main** Fax (775) 689-5972
Canada: (877) 507-1700 · (905) 507-1700 · Fax (905) 507-1777
Export: (775) 689-5700 · Fax (775) 689-5975
www.wellsbloomfield.com
© 2007 Wells Bloomfield · Printed in the U.S.A.
07/07 · No. 307037 (-) ECN-13129