GAS COUNTERTOP HEAVY DUTY HOTPLATES

HDHP-1230G, HDHP-2430G & HDHP-3630G

(HDHP-2430G Shown)

Wells Gas Countertop Heavy Duty Hotplates are designed for use with either natural or LP gas. Hotplates are factory configured for natural gas and are field convertible to LP gas. Each burner has an adjustable air shutter to control primary air. Removable drip pan and burners provide easy clean-up.

Features

- Stainless steel housing with removable front panel to provide easy access to components.
- Durable cast iron burners that are ideal for commercial kitchens. Provide superior flame characteristics, faster heat-up, immediate turn-down and gentle true low heats. Each burner has an adjustable air shutter to control primary air and provide optimum combustion.
- Each burner has ON/OFF control valves that provide infinite heat adjustment.
- Heavy duty 4" steel legs.
- Meets ANSI Z83 and NSF International standards.
- One year warranty covers parts and labor.

Specifications

Overall Dimensions	Inches	MM
All Models:		
Depth	30 1/4	768
Height (incl. 4" legs)	14 11/16	373
Width:		
HDHP-1230G	12	305
HDHP-2430G	23 3/4	603
HDHP-3630G	35 1/2	902
Temperature Settings:	OFF/LO to HI	
Number of burners:	2, 4, or 6	
Weights	Lbs.	KG
HDHP-1230G Installed	67	30
Shipping	88	40
HDHP-2430G Installed	133	60
Shipping	225	102
HDHP-3630G Installed	199	90
Shipping	304	138

Accessories/Options

20563 Legs, set of 4, 4" adjustable nickel plated alloy

2 Erik Circle · Verdi, Nevada 89439 · USA
Tel. 775-689-5700 · Fax Orders · 800-356-5142 · www.WellsBloomfield.com
© 2007 Wells Bloomfield · Printed in the U.S.A. · 07/07 · No. 307036 (-) ECN-13129

STD.4

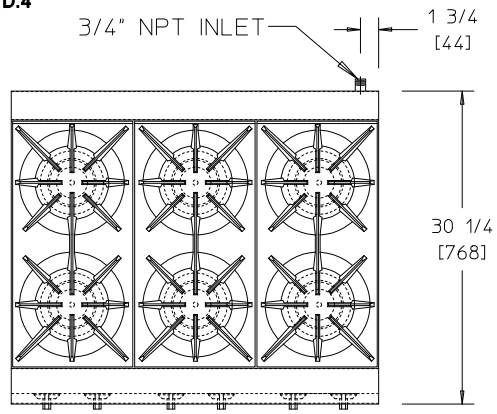

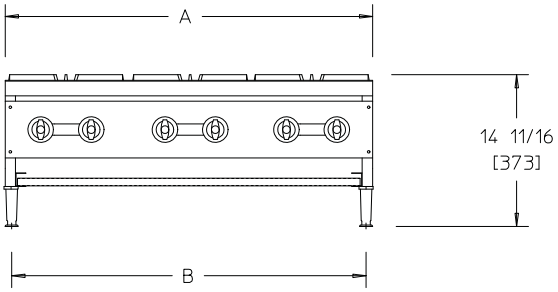

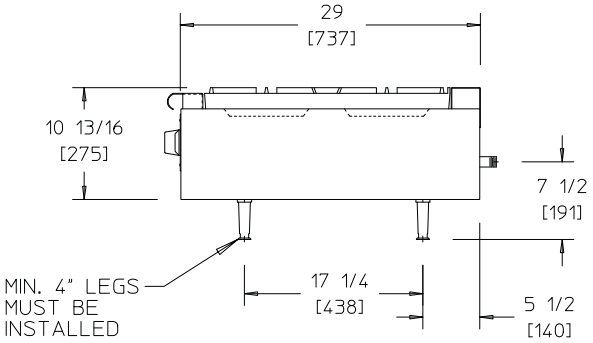

DIMENSIONS: INCH [MM]

NOTE: Specifications are subject to change without notice and are not intended for installation purposes. See installation instructions at www.wellsbloomfield.com prior to installing unit.

	BTU RATING		DIMENSION	
	NATURAL	L.P. GAS		
MODEL	GAS 5" W.C.	10" W.C.	"A"	"B"
HDHP-1230G	53,000	43,000 *	12" [305]	10 5/8" [270]
HDHP-2430G	106,000	86,000 *	23 3/4" [603]	22 3/8" [568]
HDHP-3630G	159,000	129,000 *	35 1/2" [902]	34 1/4" [870]

*** PROPANE CONVERSION KIT INCLUDED WITH EACH HOTPLATE**

MINIMUM CLEARANCE FROM NON–COMBUSTIBLE SURFACES			
BACK	SIDE	BOTTOM	FRONT
0 [0]	0 [0]	4 [102]	0 [0]

Wells Bloomfield
2 Erik Circle, P.O. Box 280, Verdi, Nevada 89439 U.S.A.
U.S.A.: (775) 689-5700 · (888) 356-5362 · Fax (775) 689-5972
Canada: (877) 507-1700 · (905) 507-1700 · Fax (905) 507-1777
Export: (775) 689-5700 · Fax (775) 689-5975
www.wellsbloomfield.com
© 2007 Wells Bloomfield · Printed in the U.S.A.
07/07 · No. 307036 (-) ECN-13129