GAS COUNTERTOP HOTPLATES

H2412G, H2412G-IO

(H2412G-IO Shown)

Wells Gas Countertop Hotplates are designed for use with either natural or LP gas. Each burner has an adjustable air shutter to control primary air. Removable drip pan and burners provide easy clean-up.

Features

- H2412G-IO model: The pan actuator turns gas on when the pan is placed on the burner and automatically turns gas off when the pan is removed. This feature provides dramatic energy savings.
- Stainless steel front panel is removable to provide easy access to components.
- Stainless steel rod grates cover burners and allow easy movement of cooking vessels from one burner to the other.
- Stainless steel burners with slotted gas ports provide superior flame characteristics, faster heat-up, immediate turn-down and gentle true low heats.
- Two ON/OFF control valves provide infinite heat adjustment.
- Removable drip pan and burners provide easy clean-up.
- Meets ANSI Z83 and NSF International standards.
- A one year warranty against defects covers parts and labor.

Specifications

Overall Dimensions	Inches	MM
Width	12 1/8	308
Depth	23 3/4	603
Height (incl. 4" legs)	13 1/2	343
Temperature Settings:	OFF/LO to HI	
Number of controls:	2	
Weights	Lbs.	KG
Installed	29	13
Shipping	32	15

Accessories/Options

20563 Legs, set of four, metal, 4" adjustable

2 Erik Circle · Verdi, Nevada 89439 · USA
Tel. 775-689-5700 · Fax Orders 800-356-5142 · www.WellsBloomfield.com
© 2007 Wells Bloomfield · Printed in the U.S.A. · 06/07 · No. 40400 (C) ECN-13292

STD.4 US

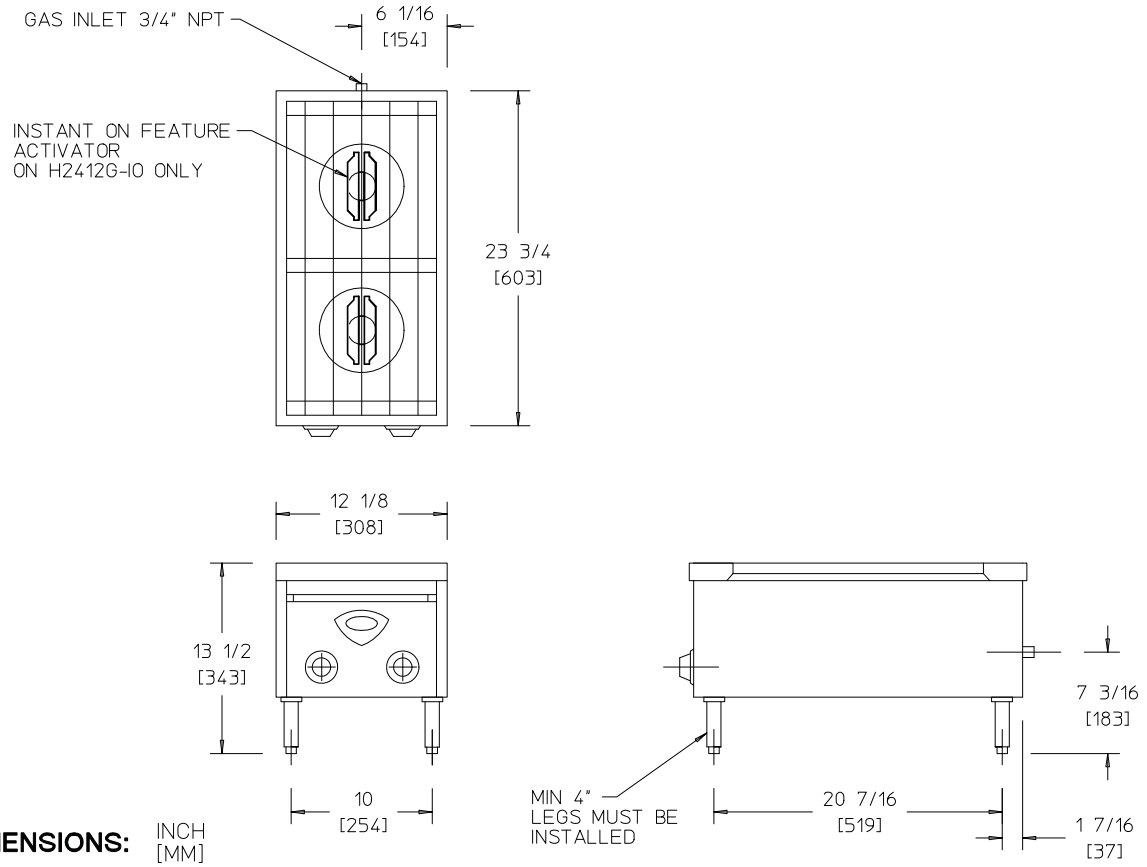

DIMENSIONS: INCH [MM]

NOTE: Specifications are subject to change without notice and are not intended for installation purposes. See installation instructions at www.wellsbloomfield.com prior to installing unit.

MODELS	NO. OF BURNERS	NO. OF THERMOSTATS			MANIFOLD PRESSURE	
			BTU/HR/BURNER	TOTAL BTU/HR	NATURAL	PROPANE
H2412G	2	2	12,000	24,000	5 IN W.C.	10.0 IN. W.C.
H2412G-IO	2	2	12,000	24,000	5 IN W.C.	10.0 IN. W.C.

MINIMUM CLEARANCE FROM COMBUSTIBLE SURFACES			
BACK	SIDE	BOTTOM	FRONT
3 [76]	3 [76]	4 [102]	NA [NA]

Wells Bloomfield
2 Erik Circle, P.O. Box 280, Verdi, Nevada 89439 U.S.A.
U.S.A.: (775) 689-5700 · (888) 356-5362 · Main Fax (775) 689-5972
Canada: (877) 507-1700 · (905) 507-1700 · Fax (905) 507-1777
Export: (775) 689-5700 · Fax (775) 689-5975
www.wellsbloomfield.com
© 2007 Wells Bloomfield · Printed in the U.S.A.
06/07 · No. 40400 (C) ECN-13292