ITEM NO. _____

SW-10, SW-10T COUNTERTOP WARMERS

SW-10

Wells Countertop Food Warmers are designed for efficiency and versatility. A tubular element, positioned beneath the food well, is designed for wet or dry operation. The warmers will accommodate a variety of inset sizes with appropriate adapter top.

Specifications

Overall Dimensions:	Inches	MM
Width	12 5/8	321
Depth	12 5/8	321
Height (incl. 1" legs)	9 3/8	238
Temperature Range:	**Fahrenheit**	**Celsius**
SW-10	off/low to high	
SW-10T	90° to 212°	32° to 100°
Weights:	**Lbs.**	**KG**
Installed	11	5
Shipping	14	6

Accessories / Options

Adapter Top, to hold one 4-quart inset, 20822

Adapter Top, to hold one 7-quart inset, 20175

Inset, 4-quart capacity with lid, 20774

Inset, 7-quart capacity with lid, 20587

Inset, 11-quart capacity with hinged lid, 21057

Legs, set of four, plastic, 4", 20314

Ladle, 6 oz., metal, 21764

Features

- **The tubular element,** located under the warming pan, allows for quick heating.
- Model SW-10T has a **positive-off thermostat** that controls the element, allowing for adjustable and more consistent temperatures. A signal light indicates that the heating element is energized.
- Model SW-10 has an **inifinite switch** that regulates temperature and has a positive-off position with signal light to indicate a power-on condition.
- **Warming pan** is deep-drawn stainless steel for maximum strength and durability.
- Warmers are designed for **wet or dry operation.**
- **Warming pan** holds a standard 11-quart inset.
- Each unit is provided with **1" legs**
- **The SW-10 and SW-10T Warmers** are Underwriters Laboratories, Inc. LISTED and meet NSF International standards.
- **A one-year warranty** against defects covers parts and labor.

WELLS

LISTED
E6070

STD.4

MODELS SW-10, SW-10T WARMERS

DIMENSIONS: INCH (MM)

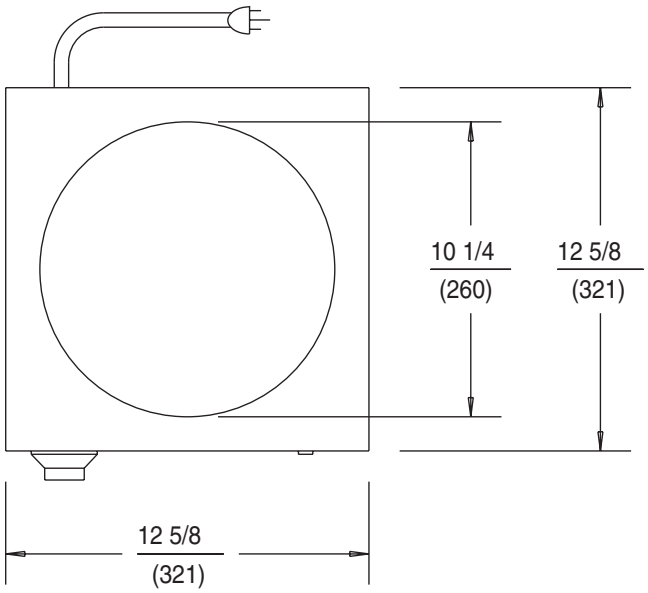

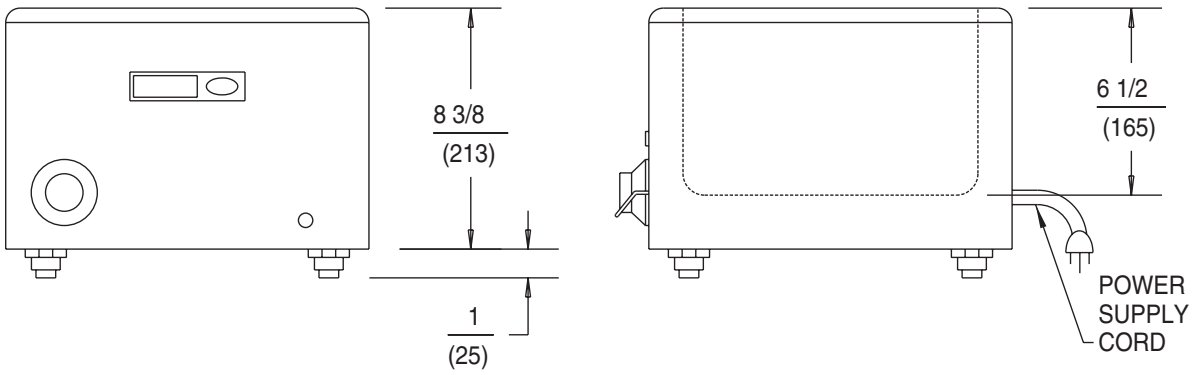

SW-10, SW-10T ELECTRICAL SPECIFICATIONS:

MODELS	VOLTS	WATTS	AMPS	PHASE	POWER SUPPLY CORD
*SW-10	120	450	3.8	SINGLE	NEMA 5-15P
SW-10T	120	825	6.9	SINGLE	NEMA 5-15P

NOTE: Specifications are subject to change without notice. *Meets Canadian Standard Requirements.

WELLS MANUFACTURING COMPANY
2 ERIK CIRCLE, PO BOX 280, VERDI, NV 89439 U.S.A.
USA PHONE: (775) 689-5700 • FAX: (775) 689-5972
FOR ORDERS ONLY: (888) 356-5362 • FAX: (800) 356-5142
www.wells-mfg.com
© 2002 WELLS MANUFACTURING • PRINTED IN THE U.S.A.
02/02 • REV(D) • PART NO. 41926

WELLS