Dutchess

Bakers' Machinery Company, Inc.

A subsidiary of Superior-Lidgerwood-Mundy Corp.

A United States of America Manufacturer
Since 1886

Item No. _____

DUT/TXM-SS

MANUAL DOUGH PRESS
TORTILLA & PIZZA

Available Through:

Manually Operated Dough Press

Great for: Flour Tortillas, Corn Tortillas & Pizza

Features Include:

- o Large 16" x 20" Rectangular Platens.
- o Heat one or both platens to 450°F or use it without heat for cold pressing.
- o Easy-to-use digital temperature readout.
- o Bottom platen swings out saving space and easier to use than top swinging models.
- o Easy to use Cam over-lock linkage reduces operator fatigue.
- o Illuminated power On/Off Buttons.
- o Sleek, Modern Durable and easy to clean all Stainless Steel design.
- o Optional non-stick coated upper & lower platens.
- o Quick lube fittings for easy maintenance.
- o 220 volt, 4000 watts, 20 amps.
- o 22-1/2" wide x 31-3/8" high x 37-7/8" deep.
- o NSF Certified
- o ETL Certified

The Model DUT/TXM-SS manual stainless steel Tortilla & Pizza Press is the most efficient, durable and easiest way to press Tortillas or Pizza dough. With the large 16" x 20" rectangular dual heated platens you can press, flatten or par bake 4-6 Tortillas in seconds. Pizza dough can be cold pressed, warm pressed or par baked in just a few seconds. The lightweight bottom platen easily swings out to allow quick loading and unloading product.

ASSOCIATE MEMBER
MAFSI
Manufacturers' Agents for the Food Service Industry

(AP-2000-2/09)

Dutchess Bakers' Machinery Co.
302 Grand Avenue, PO Box 39
Superior, WI 54880

ISO 9000:2001 COMPLIANT

Toll Free: 800-777-4498
Phone: 715-394-4444
Fax: 715-394-2406
sales@dutchessbakers.com
www.dutchessbakers.com

© 2009 Dutchess Bakers Machinery Company

MODEL DUT/TXM-SS

Manually Operated Dough Press (Dual Heated Platens)

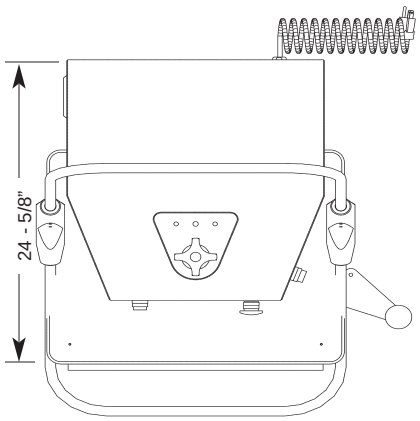

Top View

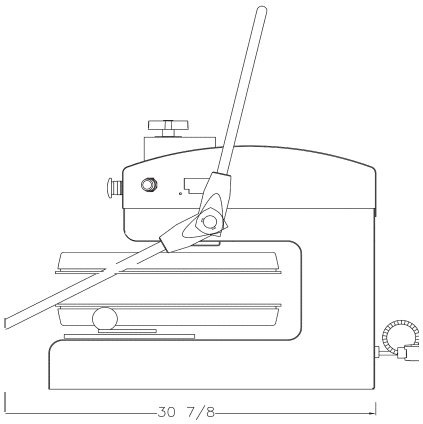

Right Side View

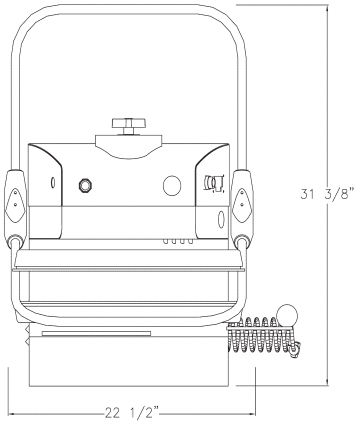

Front View

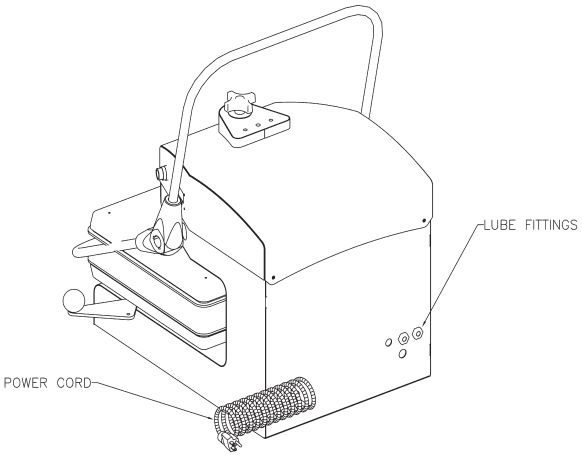

Electrical:
220 Volt, 60 Cycle, Single Phase
4,000 Watts
20 Amp service required.

Machine Dimensions:
Width: 22-1/2“ (57.2 cm) **Depth:** 30-7/8” (78.4 cm) **Height:** 31-3/8” (79.7 cm)
Shipping Wt.: 235 lbs **Net Wt.:** 217 lbs
Shipping Class: 85 **FOB:** Pittsburg, KS 66762
Shipping Dimensions: 34’w x 24”d x 32”h (86.36 cm x 60.96 cm x 81.28 cm)

Manually Operated Dough Press *(Dual Heated Platens)*
Can be used with one or both Platens heated, or no heat for cold press method.
Platens can be heated to 450°F

Standard: Stainless Steel, Type 304 with #4 Polished Finish
Options: Xylan coated non-stick Platens

Dutchess Bakers’ Machinery Company Inc., 302 Grand Avenue, Superior, WI 54880-0039

Toll Free: 800-777-4498 ~ Ph: 715-394-4444 ~ Fax: 715-394-2406
sales@dutchessbakers.com ~ www.dutchessbakers.com

Printed: February, 2009 *Printed in the USA*