Foodservice Equipment

Job_____ Item#_____

Aluminum Full Size Non-Insulated & Insulated Heater / Proofers

HPU17 & HPU17I

SIZE:
HPU17
66-3/4" High, 24-1/6" Wide, 31-1/8" Deep
1696 mm High, 614 mm Wide, 791 mm Deep

Toastmaster's HPU17 - In locations where cabinets will be used primarily for holding with infrequent serving applications (gauged by door openings) or in situations with limited start-up budgets, the non-insulated cabinet would satisfy most requirements. In higher volume operations with more frequent serving applications the insulated cabinet would be the better choice as it delivers a faster recovery and greater consistency of temperature.

CONTROLS:
- Mechanical controls
- Indicator light for thermostat
- Removable heating unit
- Separate heat and humidity controls

STANDARD FEATURES:
- Aluminum construction
- Removable heating console
- Full view lexan door
- Set of 5" swivel casters with brakes
- Universal pan slides
- Lift-off hinges

OPTIONAL FEATURES:
- Solid door

Toastmaster® 10 Sunnen Dr. St. Louis, MO 63143• www.toastmastercorp.com
Toll Free: 1-800-264-7827 • Telephone: 1-314-781-2777 • Toll Free Fax: 1-800-264-6666 • Fax: 314-781-3636

Aluminum Full Size Non-Insulated & Insulated Heater / Proofers

HPU17 & HPU17I

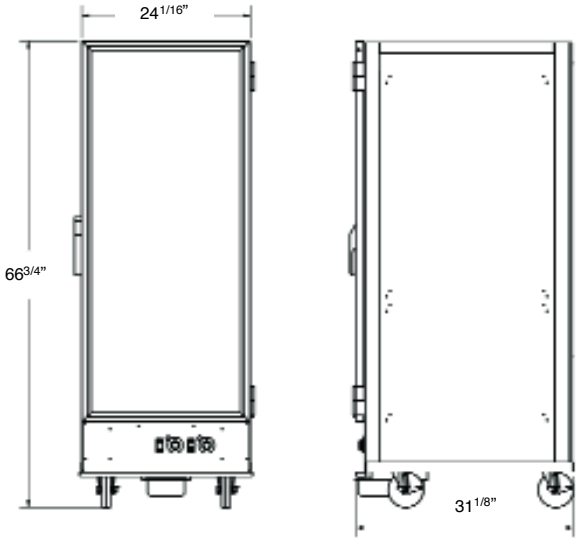

FRONT SIDE

SPECIFICATIONS:

SERVICE CONNECTIONS:
- Unit is shipped from factory with 120V cord
- NEMA 5-20P

CAPACITY:

	18"x26" Full Size Sheet Pans	12"x20" Food Service Pans	18"x13" Half Size Sheet Pans
Heater/ Proofer	17	34	34
Spacing	3"	3"	3"

DIMENSIONS:

	Height	Width	Depth
Exterior	66-3/4"	24-1/16"	31-1/8"
Interior	52"	20-3/4"	27-1/2"

ELECTRICAL:

Amp Draw	120/1	208/3	240/1	240/3
	14	n/a	n/a	n/a

LISTINGS:
The HPU17 has C-ETL-US and NSF listings.

DOOR SWING:
- 21 3/4"

PACKING SIZE:
72" High, 28" Wide, 40" Deep
(1828 mm High, 711 mm Wide, 1016 mm Deep)

SHIPPING WEIGHT:
140 Pounds, FOB Menominee, MI 49858

INTENDED FOR COMMERCIAL USE ONLY. NOT FOR HOUSEHOLD USE. TM130/1080

Toastmaster, in line with its policy to continually improve its product, reserves the right to change materials or specifications without notice. Such revisions do not entitle the buyer to corresponding changes, improvements, additions, or replacements for previously purchased equipment.

THE MIDDLEBY CORPORATION
THE BRAND BEHIND THE BRANDS

Toastmaster® 10 Sunnen Dr. St. Louis, MO 63143• www.toastmastercorp.com
Toll Free: 1-800-264-7827 • Telephone: 1-314-781-2777 • Toll Free Fax: 1-800-264-6666 • Fax: 314-781-3636