ITEM NO. _____

# HMP-6 BUILT-IN HALF-SIZE FOOD WARMER



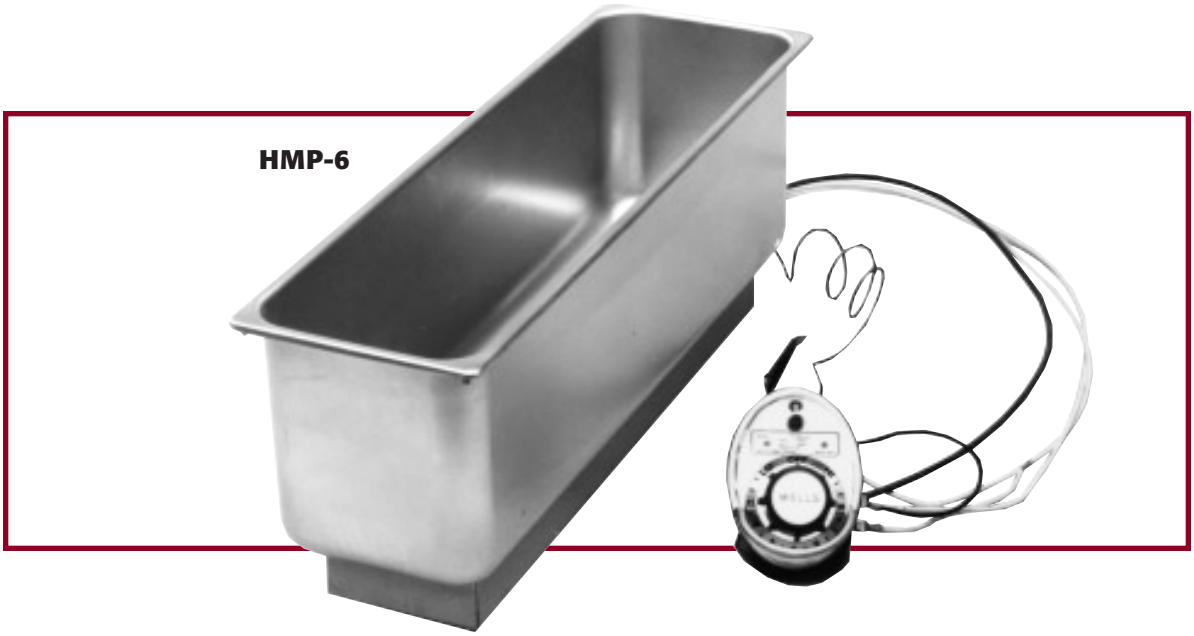


**Wells HMP-6 built-in half-size warmer** is designed for top mount installation and accommodates a 6" x 20" pan. This dependable and practical unit will allow a variety of products to be served in a compact space.

## Specifications

| Overall Dimensions: | Inches | MM |
|---|---|---|
| Width | 6 3/8 | 162 |
| Depth | 20 3/4 | 527 |
| **Temperature Settings:** | OFF/LO to HI | |
| **Weights:** | **Lbs.** | **KG** |
| Installed | 10 | 5 |
| Shipping | 11 | 5 |

## Accessories / Options

**Drain Screen,** 21709

**Optional Drain (D)** is available

**Drain Valve Extension Kit,**
extension from drain to counter front with remote handle, for use with "D" models only, 20385

## Features

- Threaded mounting studs provide quick and easy **top mount installation.**
- The unique **6" x 20" half-size** pan saves counter space.
- **The tubular element,** located under the warming pan, allows for quick heating.
- **A positive-off thermostat** controls the element allowing for adjustable and more consistent temperatures. A signal light indicates that the heating element is energized.
- **Thermostatic control** is housed in a remote, oval panel with a guard ring to help prevent accidental temperature changes.
- **Warming pan is deep-drawn, stainless steel** for maximum strength and durability.
- Designed for **wet or dry operation.**
- The HMP-6 warmer is **Underwriters Laboratories, Inc. recognized** and meets **NSF** International standards.
- **A one-year warranty** against defects covers parts and labor.

STD.4

# MODEL HMP-6 BUILT-IN WARMER

## DIMENSIONS:

INCH
(MM)

| SUGGESTED CLEARANCE FROM UNIT TO THE NEAREST SURFACE | | | |
|---|---|---|---|
| BACK | SIDE | BOTTOM | FRONT |
| 1 (25) | 2 (51) | 9 (229) | 2 5/8 (67) |

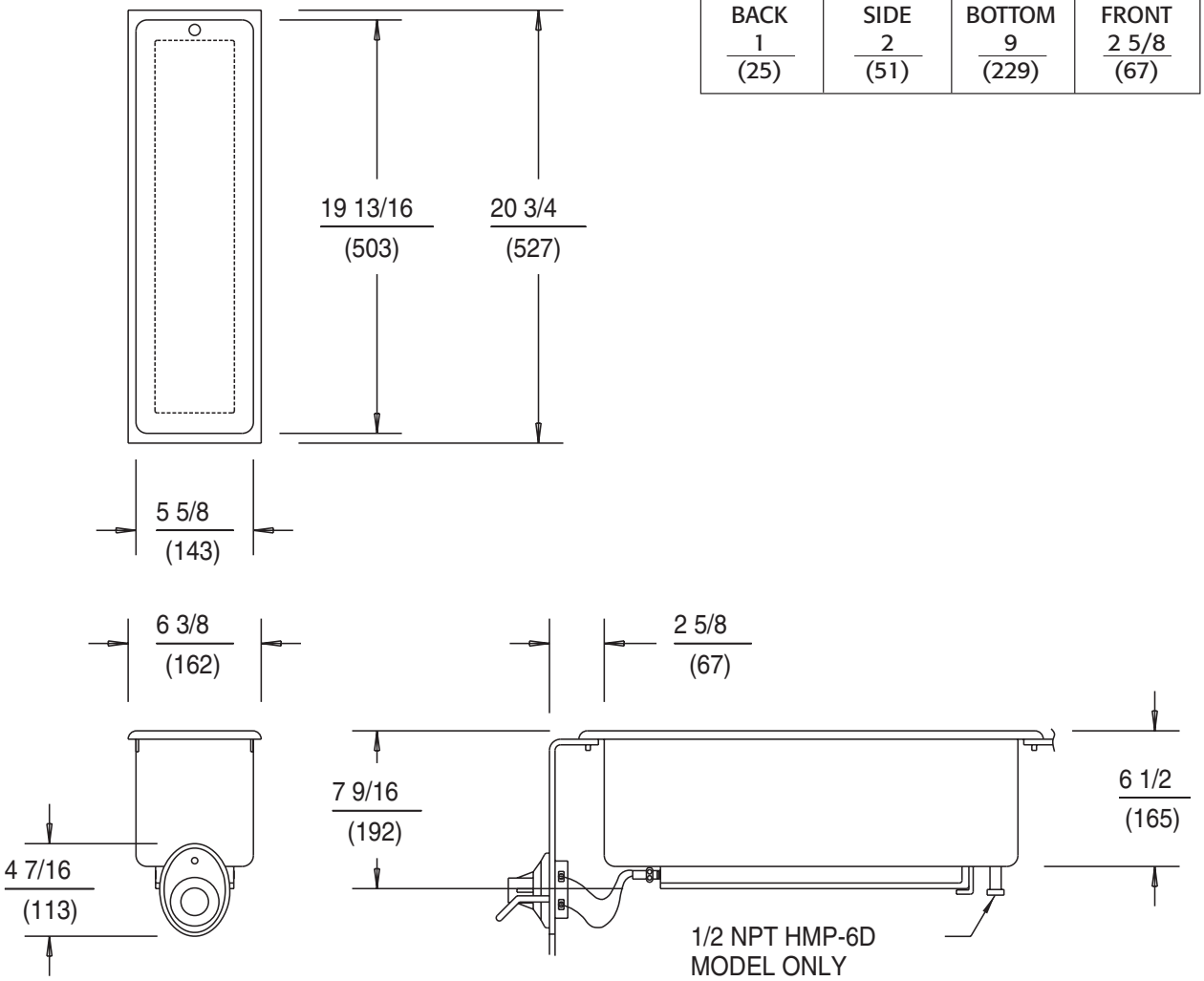


## HMP-6 ELECTRICAL SPECIFICATIONS:

| MODELS | VOLTS | WATTS | AMPS | PHASE | POWER SUPPLY CORD |
|---|---|---|---|---|---|
| HMP-6 | 120 | 750 | 6.3 | SINGLE | NONE |

All models with a 'D' suffix have the same electrical specifications as the standard versions.

NOTE: Specifications are subject to change without notice. See installation instructions prior to installing the unit. This document is not for installation purposes. The installation of recognized component units requires additional evaluations to Underwriters Laboratories Inc. standards. Depending on the installation, clearances can be changed upon further evaluations to UL standards.

THIS UNIT IS DESIGNED TO BE INSTALLED IN METAL COUNTERS ONLY

WELLS MANUFACTURING COMPANY
2 ERIK CIRCLE, PO BOX 280, VERDI, NV 89439 U.S.A.
USA PHONE: (775) 689-5700 • FAX: (775) 689-5972
FOR ORDERS ONLY: (888) 356-5362 • FAX: (800) 356-5142
www.wells-mfg.com
© 2002 WELLS MANUFACTURING • PRINTED IN THE U.S.A.
03/02 • REV(H) • PART NO. 41318

WELLS