SPECIFICATION SHEET

Item No.: _____ Qty. ____
Model No.: _____
Project No: _____

Elkay SSP – Sinks – 14" Super Economy Series Sinks – 3 Compartment – Left & Right Drainboards

11" Super Economy Series Sinks

11" Deep Super Economy Three Compartment Stainless Steel Sinks

- ❑ **SE3C18X18-2-18X**
- ❑ **SE3C24X24-2-24X**

Options

- ❑ Faucets
- ❑ Tub Accessories
- ❑ Undershelves
- ❑ Rotary Drain Options
- ❑ H-Frame Stainless Steel Legs
- ❑ Stainless Steel Feet Options (bullet & flange styles)

Specifications

11" Super Economy Series Sink, with three compartments, both left and right drainboards, 9" backsplash, 18 gauge, 300 series stainless steel top and bowl, galvanized legs & adjustable feet, raised 1-1/2" rolled edge, includes 3-1/2" basket strainer, NSF approved

Features

- 18 Ga. stainless steel
- Welded construction for consistent metal gauge thickness throughout
- 11" (279.4 mm) deep tub with 3/4" (19.1 mm) coved radius tub corners
- All drainboards are die stamped for positive drainage
- 9" (228.6 mm) backsplash with tile ledge for easy
- installation
  Raised 1-1/2" (38.1 mm) diameter rolled edge
- 3-1/2" (88.9 mm) drain with basket strainers included
- 1-5/8" (41.3 mm) galvanized legs with 1" (25.4 mm) adjustable plastic feet

Materials

- Sink & Bowl: 18 Ga. 300 series stainless steel
- Top: Drainboards and backsplash are 18 gauge 300 series stainless steel.
- Legs: All sinks furnished with 1-5/8" (41.3 mm) diameter heavy gauge galvanized tubing with plated galvanized leg gussets and high impact corrosion resistant fully adjustable 1" (25.4 mm) feet.

Mechanical

- 1-1/8" (28.6mm) faucet holes on 8" (203mm) centers
- 3-1/2" (88.9mm) waste drain opening

NSF AUTOQUOTES The KCL CADalog

Flyer Product

In keeping with our policy of continuing product improvement, Elkay SSP reserves the right to change product specifications without notice.

This specification describes an Elkay SSP product with design, quality and functional benefits to the user. When making a comparison of other producers' offerings, be certain these features are not overlooked.

Elkay SSP
421 N. Freya St.
Spokane, WA 99205
Phone: 800-726-0553 Fax: 509-535-1493

Website: www.sspinc.net
Email: sspsales@elkay.com
©2011 SSP INC.

Tundra Specialties

Item No.: _____ Qty. ____
Model No.: _____
Project No: _____

11" Super Economy Series Sinks

11" Deep Super Economy Three Compartment Stainless Steel Sinks

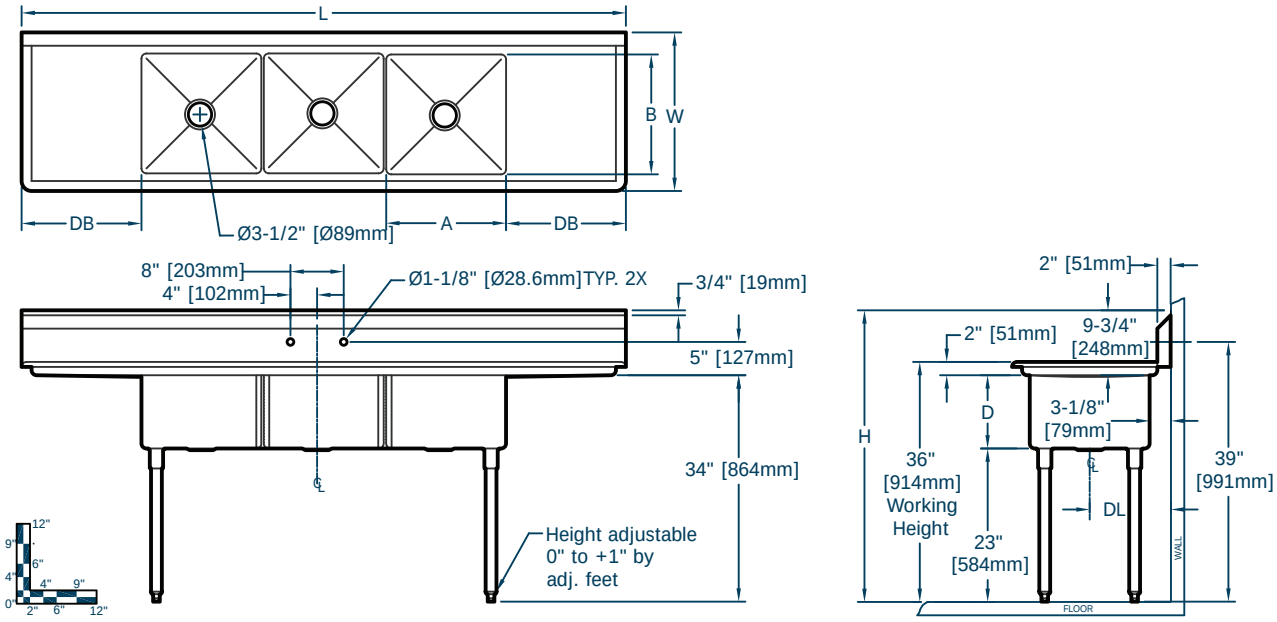

11" Super Economy Series Sinks																							
	Bowl Dimensions						Overall Size						Drainboard			Drain		Weight	
	Width A		Front-to-Back B		Depth D		Length L		Width W		Height H		Location	Size DB		Location DL			
Model Number	in.	mm	in.	mm	in.	mm	in.	mm	in.	mm	in.	mm		in.	mm	in.	mm	lbs.	kg
SE 3C 18 X 18 2 18 X	18	457	18	457	11	279	90	2286	23.8	605	43.8	1111	L & R	18	457	12	305	97	44
SE 3C 24 X 24 2 24 X	24	610	24	610	11	279	120	3048	29.8	757	43.8	1111	L & R	24	610	15	381	133	60

- Flyer Product
- Drainboard Length - in.
- # or Position of Drainboards
- Tubs Size - in. (Width x Front-to-Back)
- # of Compartments
- 11" Super Economy Series

Elkay SSP
421 N. Freya St.
Spokane, WA 99205
Phone: 800-726-0553 Fax: 509-535-1493

Website: www.sspinc.net
Email: sspsales@elkay.com
©2011 SSP INC.

Tundra Specialties