FEDERAL

a Standex company

Item_____

# HIGH VOLUME NON-REFRIGERATED BAKERY CASE MODEL SGD3148 SGD3642 SGD3648 SGD5042 SGD5048 SGD5942 SGD5948 SGD7742 SGD7748

*Display more product and serve more customers with presentation and value in mind. Cases are available in lengths of 31", 36", 50", 59", and 77". Designed for continuous case line-ups without middle end glass.*

## STANDARD FEATURES

- Adjustable white wire shelves. Shelves are adjustable up and down and can also be tilted in three positions. 48" models have three tiers of shelves; 42" models have two tiers of shelves.
- Tempered tilt-out front glass for easy cleaning. Front glass is sloped for high visual product display.
- Tempered glass top, ends, and doors.
- Removable sliding rear doors, shelf lights, shelf supports, and shelves.
- 31" and 36" have two swing doors.
- Shielded top light and shelf lights.
- Steel base construction with a choice of six standard laminates on base. Other finishes optional.
- Scratch-resistant, corrosion-proof white vented display deck.
- Designed for continuous line-ups.
- Black trim.
- UL Safety and UL Sanitation Listed.

# HIGH VOLUME
## NON-REFRIGERATED BAKERY CASE

### OPTIONAL ACCESSORIES:

* Special Base Finish
* Glass Shelves
* Rear Wrapping Board
* Cord & Plug (NEMA 5-15)
* Fan Kit
* Black, Gold, or Chrome Wire Shelves
* Reflective Ends
* White or Mirrored Interior Ends with Laminated Exterior
* Reflective Rear Doors
* Casters/Cord & Plug Included
* Legs
* Top Cutting Board, White
* Package Shelf
* Light Below Package Shelf
* Front Glass & Rear Door Locks
* Joining Kit for Continuous Line-ups

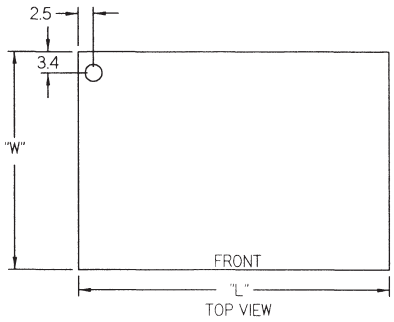


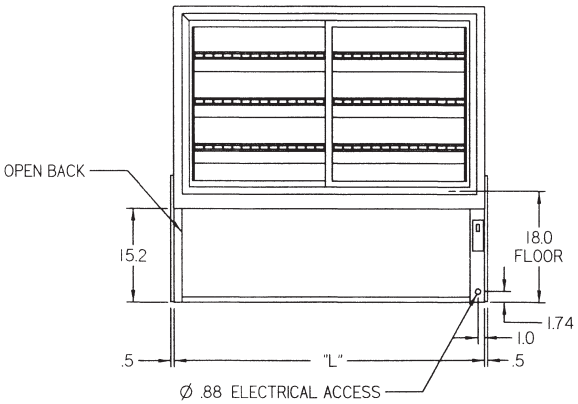


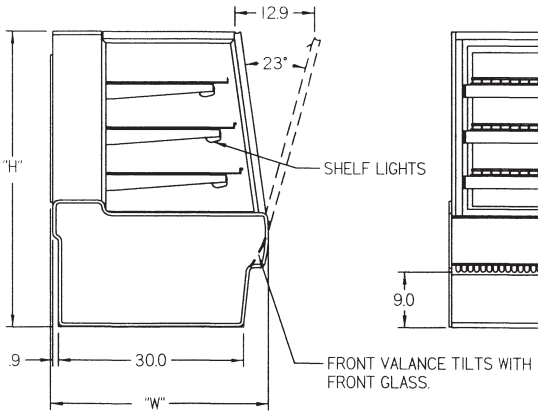


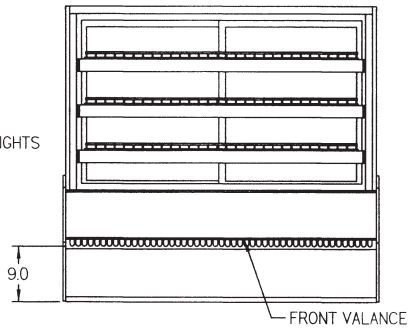


### SPECIFICATIONS:

| Model | Dimensions L W H | Shipping Weight (lbs.) | Bakery Pan Capacity | Electrical (120/60/1) |
|---|---|---|---|---|
| SGD3148 | 31.13" x 35.31" x 48" | 270 | 4 (18" x 26") & 4 (9" x 26") | 1.5 AMPS |
| SGD3642 | 36.13" x 35.31" x 42" | 385 | 3 (18" x 26") & 3 (9" x 26") | 1.5 AMPS |
| SGD3648 | 36.13" x 35.31" x 48" | 400 | 4 (18" x 26") & 4 (9" x 26") | 1.5 AMPS |
| SGD5042 | 50.13" x 35.31" x 42" | 425 | 6 (18" x 26") & 3 (9" x 26") | 1.5 AMPS |
| SGD5048 | 50.13" x 35.31" x 48" | 480 | 8 (18" x 26") & 4 (9" x 26") | 1.5 AMPS |
| SGD5942 | 59.13" x 35.31" x 42" | 505 | 9 (18" x 26") | 1.5 AMPS |
| SGD5948 | 59.13" x 35.31" x 48" | 535 | 12 (18" x 26") | 1.5 AMPS |
| SGD7742 | 77.13" x 35.31" x 42" | 685 | 12 (18" x 26") | 1.5 AMPS |
| SGD7748 | 77.13" x 35.31" x 48" | 715 | 16 (18" x 26") | 1.5 AMPS |

- Due to continuing engineering improvements, specifications are subject to change without notice.

**Look to Federal for Innovative Merchandising**


**Federal Industries**
**A Standex Company**
**215 Federal Avenue**
**Belleville WI 53508-0290**
**Phone: 800-356-4206**
**Fax: 608-424-3234**
**Email: geninfo@federalind.com**
**Web Site: www.federalind.com**