Item_____

CONVERTIBLE SERVICE OVER REFRIGERATED SELF-SERVE SPECIALTY MERCHANDISER

MODEL SSRC3652
SSRC5052
SSRC5952
SSRC7752

Display a variety of products and serve more customers with presentation and value in mind. Cases are available in lengths of 36", 50", 59", and 77".

STANDARD FEATURES

Refrigerated Self-Serve Bottom Display
- Steel base construction with black exterior. Other finishes optional.
- Black interior, mirrored end panels.
- Horizontal shielded top light.
- Two-tier black display step.
- Thermometer.
- Condensator evaporator provided for a totally self-contained system.
- Easy clean, rustproof insulated evaporator coil compartment.
- Easily accessible light switch and adjustable power switch.
- Average case temperature of 38° to 40°F is maintained.
- Rear access to the refrigeration system for quick and easy service.
- R404 Refrigerant.
- Adjustable leg levelers.

Service Top Display
- Divided merchandise area. 3' only has one display area.
- Baffle system converts display from non-refrigerated to refrigerated.
- Clear glass rear sliding doors.
- Tempered lift-up thermopane front glass.
- Adjustable black wire shelf.
- Shielded top and shelf light.
- Thermometer.

CONVERTIBLE SERVICE
OVER REFRIGERATED SELF-SERVE

OPTIONAL ACCESSORIES:

For Self-Serve Refrigerated Base
* Special Finish
* Energy-Saving Night Curtain
* Security Night Cover
* Solid Rear Sliding Access Doors for Bottom Section
* Cord & Plug
* Remote Refrigeration
* Casters or Legs
* Black Wire or Glass Shelf with Light in Lieu of Display Steps
* Rear Wrapping Board

For Service Top Display
* Reflective Rear Doors
* Glass Shelves

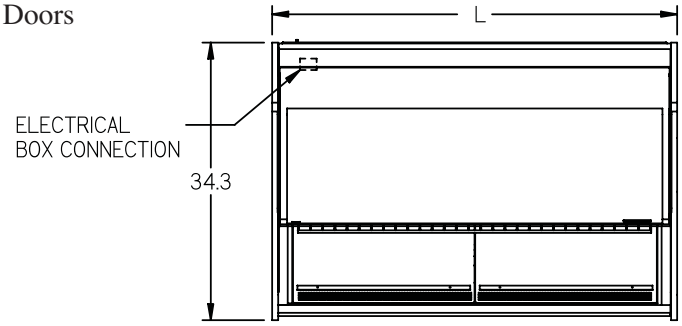

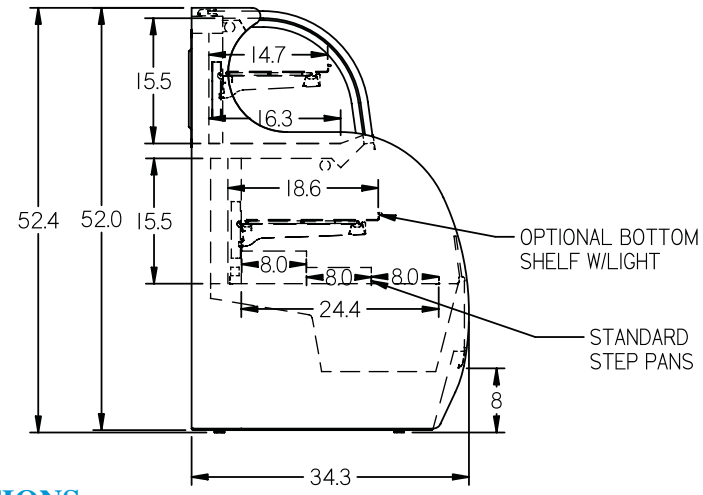

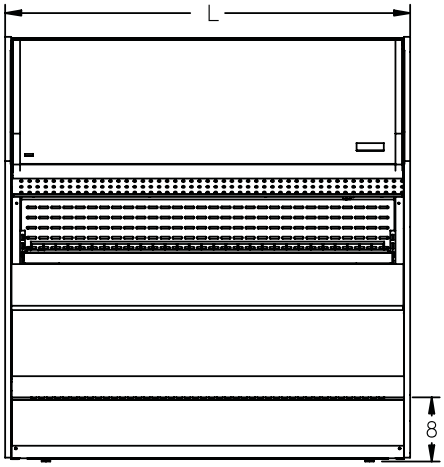

SPECIFICATIONS:

Model	Dimensions L W H	Shipping Weight (lbs)	*Self-Contained with Condensate Pan	Remote 120/60/1 with Condensate Pan
SSRC3652	36" x 34" x 52"	590	120/60/1 - 1/3 HP - 15 AMPS	10 AMPS
SSRC5052	50" x 34" x 52"	720	230/60/1 - 1/2 HP - 10 AMPS	10 AMPS
SSRC5952	59" x 34" x 52"	845	230/60/1 - 1/2 HP - 12 AMPS	12 AMPS
SSRC7752	77" x 34" x 52"	1,010	230/60/1- 3/4 HP - 13 AMPS	12 AMPS

- Refrigerated cases are designed to operate in a maximum environment of 75° F ambient and 55% relative humidity.
- Due to continuing engineering improvements, specifications are subject to change without notice.

Look to Federal for Innovative Merchandising

Federal Industries
A Standex Company
215 Federal Avenue
Belleville WI 53508-0290
Phone: 800-356-4206
Fax: 608-424-3234
Email: geninfo@federalind.com
Web Site: www.federalind.com