"DNB" Maple Top Tables with RISERS

w/ 1 3/4" thick Hard Rock Maple Top
w/ Galvanized Base

NSF Listed when ordered w/ Vertical Coved Corners

1 3/4" MAPLE TOP w/ GALVANIZED BASE					
24"WIDE	**Qty**	**30"WIDE**	**Qty**	**36"WIDE**	**Qty**
DNB01		DNB07		DNB13	
DNB02		DNB08		DNB14	
DNB03		DNB09		DNB15	
DNB04		DNB10		DNB16	
DNB05		DNB11		DNB17	
DNB05A		DNB11A		DNB17A	
DNB06		DNB12		DNB18	

FEATURES:

* 1 3/4" Thick Hard Rock Maple Top, style "SB" with 4" Coved Riser on Back and Both Ends
* Maple top is finished with Varnique Finish Clear with optional penetrating oil finish
* Galvanized base and bracing
* Bracing adjustable to desired height
* Adjustable bullet feet
* Shipped knocked-down, easy - to - assemble
* Optional drawers, casters, pot racks, etc. available
* All models are approved by the National Sanitation Foundation

OPTIONAL ACCESSORIES

	MODEL #	**Qty**
DRAWER		
DRAWER LOCK		
CASTERS		
OVERSHELVES		
POT RACK		
VERTICAL COVED CORNER		

MATERIAL:

Top:	Laminated Hard Rock Maple
Bracing:	1 1/4" Round O.D. 18 gauge tubular galvanized steel
Legs:	16 gauge Galvanized Steel
Gussets:	Galvanized Steel
Feet:	1" adjustable galvanized bullet feet

John Boos & Co
315 South First Street - Effingham, IL 62401
Phone: 217-347-7701 - Fax: 217-347-7705
Email: sales@johnboos.com - Web-site: www. johnboos.com

DETAILED SPECIFICATIONS

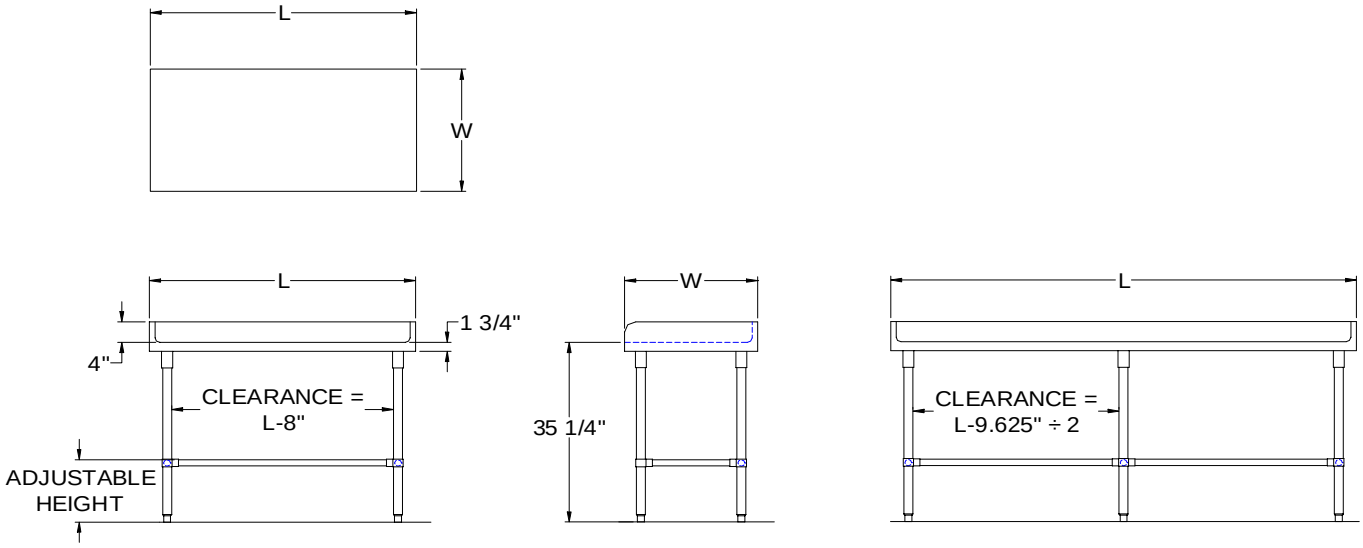

All units ship unassembled for reduced shipping cost.
Units 7 ft. and larger are furnished with six legs.
All dimensions are typical.
Tolerance +/- .500".

1-3/4" MAPLE TOP & GALVANIZED BASE

L	24" WIDE	WT.	30" WIDE	WT.	36" WIDE	WT.
48	DNB01	113	DNB07	132	DNB13	151
60	DNB02	132	DNB08	155	DNB14	179
72	DNB03	151	DNB09	178	DNB15	204
84	DNB04	169	DNB10	201	DNB16	231
96	DNB05	189	DNB11	224	DNB17	257
108	DNB05A	213	DNB11A	252	DNB17A	288
120	DNB06	237	DNB12	279	DNB18	319

John Boos & Co
315 South First - Effingham, IL 62401 Phone: 217-347-7701 - Fax: 217-347-7705
Email: sales@johnboos.com - Web-site: www.johnboos.com

March 2009

John Boos is constantly engaged in a program of improving products and therefore reserves the right to change specification without prior notice