# SPECIFICATION SHEET

Item No.: _____ Qty.:____
Model No.: _____
Project No.:_____

## Standard Series Soiled Dish Table

*Standard Series Right-to-Left Straight Soiled Dish Table*

- ❑ **DDT-36-RX**
- ❑ **DDT-48-RX**
- ❑ **DDT-60-RX**
- ❑ **DDT-72-RX**

## Options

- ❑ Stainless Steel H-frame Legs and Feet
- ❑ Rack Slides
- ❑ Scrap Baskets with Rack Slides
- ❑ Undershelves

* For additional available options, contact Elkay SSP

## Specifications

Standard Soiled Dish Table, straight design, right-to-left operation, 10" high backsplash with 2" return, 16 gauge stainless steel top & pre-rinse sink, galvanized legs with adjustable plastic feet (specify faucet hole location), NSF approved

## Features

- 16 Ga. stainless steel
- Welded construction for consistent metal gauge thickness throughout
- 10" (254 mm) backsplash with tile edge for easy installation
- Raised 1-1/2" (38.1 mm) diameter rolled edge
- 1-5/8" (41.3 mm) galvanized H-Frame legs with 1" (25.4 mm) adjustable plastic feet

## Materials

- Top: Bowl and backsplash are 16 gauge 300 series stainless steel
- Legs: 1-5/8" (41.3 mm) diameter heavy gauge galvanized tubing with galvanized leg gussets and high impact, corrosion resistant, adjustable 1" (25.4 mm) feet

**Flyer Product**

*In keeping with our policy of continuing product improvement, Elkay SSP reserves the right to change product specifications without notice.*

*This specification describes an Elkay SSP product with design, quality and functional benefits to the user. When making a comparison of other producers' offerings, be certain these features are not overlooked.*

**Elkay SSP**
421 N. Freya St.
Spokane, WA 99205
Phone: 800-726-0553 Fax: 509-535-1493

Website: www.sspinc.net
Email: sspsales@elkay.com
©2011 Elkay

ELKAY SSP, LLC™

Item No.: _____ Qty.:_____
Model No.: _____
Project No.:_____

# Standard Series Soiled Dish Table

*Standard Series Right-to-Left Straight Soiled Dish Table*

DDT
36″ - 72″

**Faucet Hole Options**
Specify at time of ordering

**Back Splash Mounted**
(2) 1-1/8" Dia. holes, 8" on center
Reference Front View

**Deck Mounted**
(1) 1-1/4" Dia. hole, centered over tub drain centerline
Reference Plan View

**No Hole**
Product supplied without faucet hole drilling

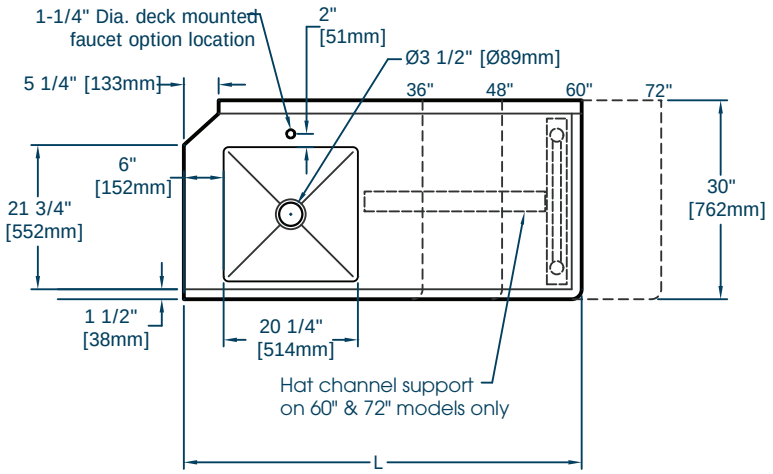


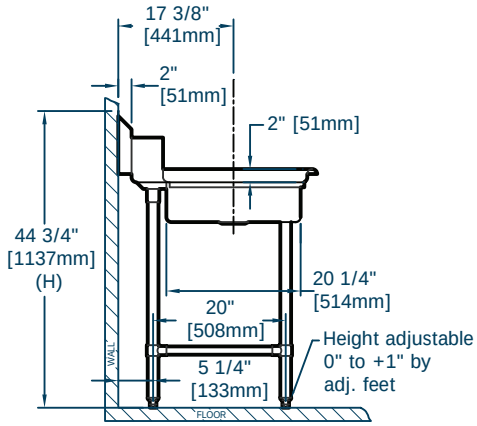


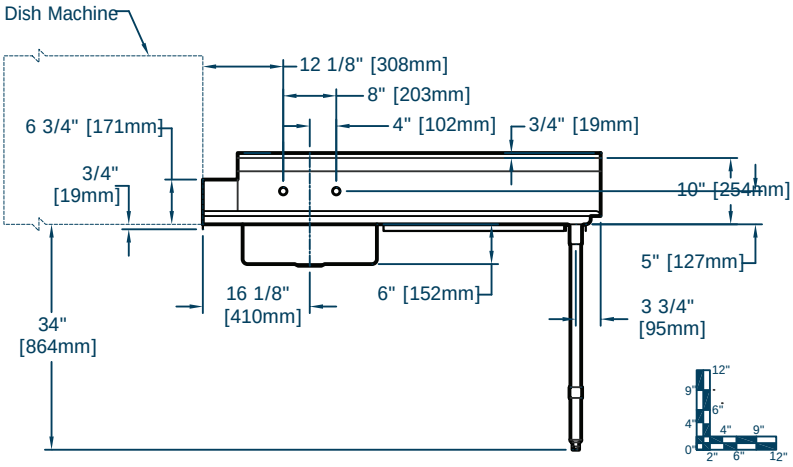


## Standard Series Straight Soiled Dish Tables

| Model Number | Bowl Dimensions Width A in. | Bowl Dimensions Width A mm | Bowl Dimensions Front-to-Back B in. | Bowl Dimensions Front-to-Back B mm | Bowl Dimensions Depth D in. | Bowl Dimensions Depth D mm | Overall Size Length L in. | Overall Size Length L mm | Overall Size Width W in. | Overall Size Width W mm | Overall Size Height H in. | Overall Size Height H mm | Drain Location DL in. | Drain Location DL mm | Weight lbs. | Weight kg |
|---|---|---|---|---|---|---|---|---|---|---|---|---|---|---|---|---|
| DDT - 36 - R X | 20.25 | 514 | 20.25 | 514 | 6 | 152 | 36 | 914.4 | 30 | 762 | 44.75 | 1137 | 17 | 441 | 95 | 43 |
| DDT - 48 - R X | 20.25 | 514 | 20.25 | 514 | 6 | 152 | 48 | 1219 | 30 | 762 | 44.75 | 1137 | 17 | 441 | 111 | 51 |
| DDT - 60 - R X | 20.25 | 514 | 20.25 | 514 | 6 | 152 | 60 | 1524 | 30 | 762 | 44.75 | 1137 | 17 | 441 | 132 | 60 |
| DDT - 72 - R X | 20.25 | 514 | 20.25 | 514 | 6 | 152 | 72 | 1829 | 30 | 762 | 44.75 | 1137 | 17 | 441 | 148 | 67 |

- Flyer Product
- Product Positioned Right of Dish Machine
- Length - in
- Soiled Dish Table, Straight Design

**Elkay SSP**
421 N. Freya St.
Spokane, WA 99205
Phone: 800-726-0553 Fax: 509-535-1493

Website: www.sspinc.net
Email: sspsales@elkay.com
©2011 Elkay