SPECIFICATION SHEET

Item No.: _____ Qty.:____
Model No.: _____
Project No.:_____

Standard Series Work Table

Standard Work Table, Flat Top with Stainless Steel Undershelf

24"	30"	36"
❑ WT24S30-STSX	❑ WT30S30-STSX	
❑ WT24S36-STSX	❑ WT30S36-STSX	❑ WT36S36-STSX
❑ WT24S48-STSX	❑ WT30S48-STSX	❑ WT36S48-STSX
❑ WT24S60-STSX	❑ WT30S60-STSX	❑ WT36S60-STSX
❑ WT24S72-STSX	❑ WT30S72-STSX	❑ WT36S72-STSX
❑ WT24S84-STSX	❑ WT30S84-STSX	❑ WT36S84-STSX
❑ WT24S96-STSX	❑ WT30S96-STSX	❑ WT36S96-STSX
❑ WT24S108-STSX	❑ WT30S108-STSX	❑ WT36S108-STSX
❑ WT24S120-STSX	❑ WT30S120-STSX	❑ WT36S120-STSX

Features

- 16 Gauge, 300 series stainless steel
- Welded construction for consistent metal gauge thickness throughout
- Sound deadened between top and bottom hat channels with double sided tape
- 1-5/8" Stainless steel legs and feet, adjustable up to 1"
- Fully adjustable stainless steel undershelf
- Shipped knocked down for reduced shipping costs and supplied with Allen wrench and screws

Options

❑ Custom Height (if less than 36")
❑ Cutout in Top (depending on size and location)
❑ Overshelves
❑ Undershelves
❑ Drawers
❑ Casters / Feet Upgrade

* For additional available options, contact Elkay SSP

Materials

- **Top:** 16 Gauge, 300 series stainless steel, 1-3/4" turned-down edge
- **Legs:** 1-5/8" Diameter heavy gauge stainless steel tubing with stainless steel leg gussets and stainless steel feet, adjustable up to 1"
- **Undershelf:** 18 Gauge, 400 series stainless steel, 1-1/2" turned-down edge, fully adjustable

Flyer Product

AUTOQUOTES

In keeping with our policy of continuing product improvement, Elkay SSP reserves the right to change product specifications without notice.

This specification describes an Elkay SSP product with design, quality and functional benefits to the user. When making a comparison of other producers' offerings, be certain these features are not overlooked.

Elkay SSP
421 N. Freya St.
Spokane, WA 99205
Phone: 800-726-0553 Fax: 509-535-1493

Website: www.sspinc.net
Email: sspsales@elkay.com
©2011 Elkay

Tundra Specialties

ELKAY SSP, LLC™

Item No.: _____ Qty.:____
Model No.: _____
Project No.:_____

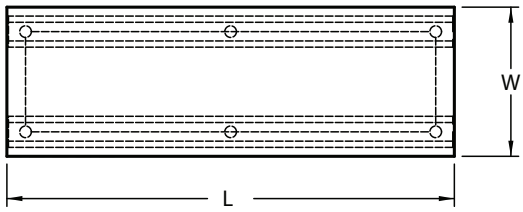

Size of Undershelf:
Common length = subtract 6" from length
24" Width = subtract 6.5" from width
30" Width = subtract 7.45" from width
36" Width = subtract 10" from width

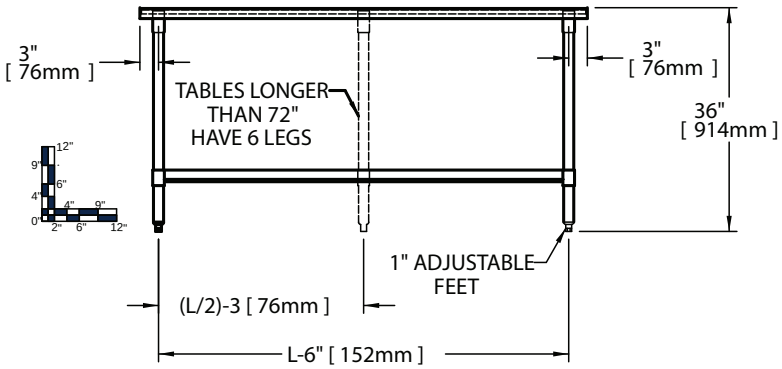

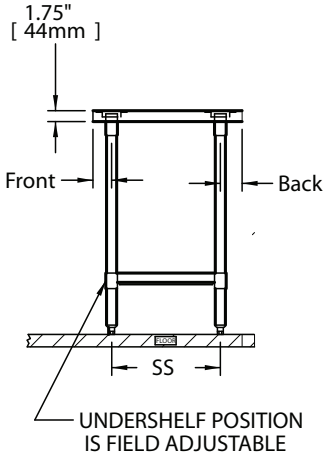

24" Work Table							30" Work Table							36" Work Table							
	Overall Size				Weight			Overall Size				Weight			Overall Size				Weight		Legs
	Length L		Height H					Length L		Height H					Length L		Height H				
Model Number	in.	mm	in.	mm	lbs.	kg	Model Number	in.	mm	in.	mm	lbs.	kg	Model Number	in.	mm	in.	mm	lbs.	kg	
WT 24 S 30 - STS X	30	762	36	914	91	41	WT 30 S 30 - STS X	30	762	36	914	102	46								4
WT 24 S 36 - STS X	36	914	36	914	99	45	WT 30 S 36 - STS X	36	914	36	914	111	50	WT 36 S 36 - STS X	36	914	36	914	126	57	4
WT 24 S 48 - STS X	48	1219	36	914	121	55	WT 30 S 48 - STS X	48	1219	36	914	134	61	WT 36 S 48 - STS X	48	1219	36	914	154	70	4
WT 24 S 60 - STS X	60	1524	36	914	147	67	WT 30 S 60 - STS X	60	1524	36	914	164	75	WT 36 S 60 - STS X	60	1524	36	914	188	85	4
WT 24 S 72 - STS X	72	1829	36	914	168	76	WT 30 S 72 - STS X	72	1829	36	914	188	85	WT 36 S 72 - STS X	72	1829	36	914	216	98	4
WT 24 S 84 - STS X	84	2134	36	914	205	93	WT 30 S 84 - STS X	84	2134	36	914	228	104	WT 36 S 84 - STS X	84	2134	36	914	261	119	6
WT 24 S 96 - STS X	96	2438	36	914	228	104	WT 30 S 96 - STS X	96	2438	36	914	253	115	WT 36 S 96 - STS X	96	2438	36	914	289	131	6
WT 24 S 108 - STS X	108	2743	36	914	257	117	WT 30 S 108 - STS X	108	2743	36	914	285	130	WT 36 S 108 - STS X	108	2743	36	914	326	148	6
WT 24 S 120 - STS X	120	3048	36	914	280	127	WT 30 S 120 - STS X	120	3048	36	914	310	141	WT 36 S 120 - STS X	120	3048	36	914	356	162	6

* Custom sizes also available

- Flyer Product
- Flat Top with Stainless Steel Undershelf
- Overall Length - in.
- Undershelf
- Overall Width - in
- Standard Series Work Table

Elkay SSP
421 N. Freya St.
Spokane, WA 99205
Phone: 800-726-0553 Fax: 509-535-1493

Website: www.sspinc.net
Email: sspsales@elkay.com
©2011 Elkay