SPECIFICATION SHEET

Item No.: _____ Qty.:____
Model No.: _____
Project No.:_____

Standard Series Work Table

Standard Work Table, Flat Top with Galvanized Undershelf

24"	30"	36"
❑ WT24S30-STGX	❑ WT30S30-STGX	
❑ WT24S36-STGX	❑ WT30S36-STGX	❑ WT36S36-STGX
❑ WT24S48-STGX	❑ WT30S48-STGX	❑ WT36S48-STGX
❑ WT24S60-STGX	❑ WT30S60-STGX	❑ WT36S60-STGX
❑ WT24S72-STGX	❑ WT30S72-STGX	❑ WT36S72-STGX
❑ WT24S84-STGX	❑ WT30S84-STGX	❑ WT36S84-STGX
❑ WT24S96-STGX	❑ WT30S96-STGX	❑ WT36S96-STGX
❑ WT24S108-STGX	❑ WT30S108-STGX	❑ WT36S108-STGX
❑ WT24S120-STGX	❑ WT30S120-STGX	❑ WT36S120-STGX

Features

- 16 Gauge, 300 series stainless steel
- Welded construction for consistent metal gauge thickness throughout
- Sound deadened between top and bottom hat channels with double sided tape
- 1-5/8" Galvanized legs with high impact plastic feet, adjustable up to 1"
- Fully adjustable galvanized undershelf
- Shipped knocked down for reduced shipping costs and supplied with Allen wrench and screws

Options

❑ Custom Height (if less than 36")
❑ Cutout in Top (depending on size and location)
❑ Overshelves
❑ Undershelves
❑ Drawers
❑ Casters / Feet Upgrade

* For additional available options, contact Elkay SSP

Materials

- **Top:** 16 Gauge, 300 series stainless steel, 1-3/4" turned-down edge
- **Legs:** 1-5/8" Diameter heavy gauge galvanized tubing with galvanized leg gussets and high impact plastic feet, adjustable up to 1"
- **Undershelf:** Galvanized steel with 1-1/2" turned-down edge, fully adjustable

Flyer Product

NSF AUTOQUOTES The KCL CADalog

In keeping with our policy of continuing product improvement, Elkay SSP reserves the right to change product specifications without notice.

This specification describes an Elkay SSP product with design, quality and functional benefits to the user. When making a comparison of other producers' offerings, be certain these features are not overlooked.

Elkay SSP
421 N. Freya St.
Spokane, WA 99205
Phone: 800-726-0553 Fax: 509-535-1493

Website: www.sspinc.net
Email: sspsales@elkay.com
©2011 Elkay

Tundra Specialties

ELKAY SSP, LLC™

Item No.: _____ Qty.:____
Model No.: _____
Project No.:_____

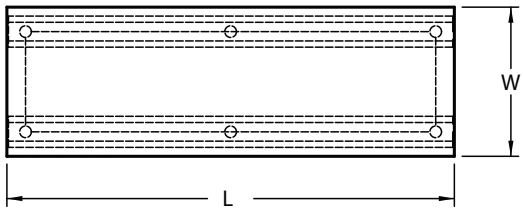

Size of Undershelf:
Common length = subtract 6" from length
24" Width = subtract 6.5" from width
30" Width = subtract 7.45" from width
36" Width = subtract 10" from width

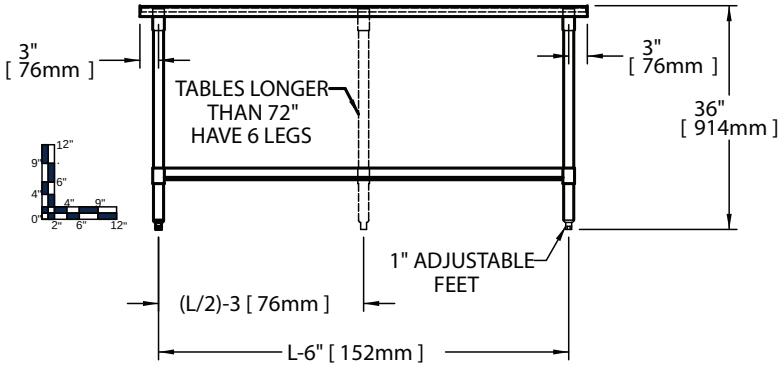

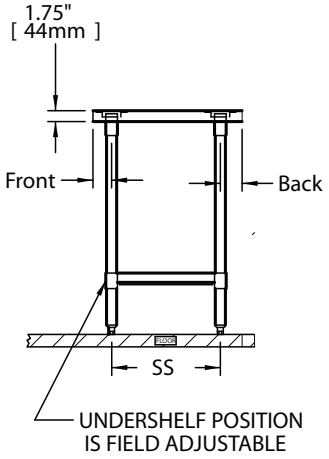

24" Work Table							30" Work Table							36" Work Table							
	Overall Size				Weight			Overall Size				Weight			Overall Size				Weight		Legs
	Length L		Height H					Length L		Height H					Length L		Height H				
Model Number	in.	mm	in.	mm	lbs.	kg	Model Number	in.	mm	in.	mm	lbs.	kg	Model Number	in.	mm	in.	mm	lbs.	kg	
WT 24 S 30 - STG X	30	762	36	914	90	41	WT 30 S 30 - STG X	30	762	36	914	101	46								4
WT 24 S 36 - STG X	36	914	36	914	98	45	WT 30 S 36 - STG X	36	914	36	914	110	50	WT 36 S 36 - STG X	36	914	36	914	125	57	4
WT 24 S 48 - STG X	48	1219	36	914	120	55	WT 30 S 48 - STG X	48	1219	36	914	133	60	WT 36 S 48 - STG X	48	1219	36	914	153	70	4
WT 24 S 60 - STG X	60	1524	36	914	146	66	WT 30 S 60 - STG X	60	1524	36	914	163	74	WT 36 S 60 - STG X	60	1524	36	914	187	85	4
WT 24 S 72 - STG X	72	1829	36	914	167	76	WT 30 S 72 - STG X	72	1829	36	914	187	85	WT 36 S 72 - STG X	72	1829	36	914	215	98	4
WT 24 S 84 - STG X	84	2134	36	914	204	93	WT 30 S 84 - STG X	84	2134	36	914	226	103	WT 36 S 84 - STG X	84	2134	36	914	259	118	6
WT 24 S 96 - STG X	96	2438	36	914	226	103	WT 30 S 96 - STG X	96	2438	36	914	251	114	WT 36 S 96 - STG X	96	2438	36	914	288	131	6
WT 24 S 108 - STG X	108	2743	36	914	256	116	WT 30 S 108 - STG X	108	2743	36	914	284	129	WT 36 S 108 - STG X	108	2743	36	914	325	148	6
WT 24 S 120 - STG X	120	3048	36	914	278	126	WT 30 S 120 - STG X	120	3048	36	914	309	140	WT 36 S 120 - STG X	120	3048	36	914	354	161	6

* Custom sizes also available

- Flyer Product
- Flat Top with Galvanized Undershelf
- Overall Length - in.
- Undershelf
- Overall Width - in
- Standard Series Work Table

Elkay SSP
421 N. Freya St.
Spokane, WA 99205
Phone: 800-726-0553 Fax: 509-535-1493

Website: www.sspinc.net
Email: sspsales@elkay.com
©2011 Elkay

Tundra Specialties