SPECIFICATION SHEET

Item No.: _____ Qty.:____
Model No.: _____
Project No.:_____

Standard Series Work Table

Standard Work Table, Backsplash with Galvanized Undershelf

24"	30"	36"
❑ WT24S30-BGX	❑ WT30S30-BGX	
❑ WT24S36-BGX	❑ WT30S36-BGX	❑ WT36S36-BGX
❑ WT24S48-BGX	❑ WT30S48-BGX	❑ WT36S48-BGX
❑ WT24S60-BGX	❑ WT30S60-BGX	❑ WT36S60-BGX
❑ WT24S72-BGX	❑ WT30S72-BGX	❑ WT36S72-BGX
❑ WT24S84-BGX	❑ WT30S84-BGX	❑ WT36S84-BGX
❑ WT24S96-BGX	❑ WT30S96-BGX	❑ WT36S96-BGX
❑ WT24S108-BGX	❑ WT30S108-BGX	❑ WT36S108-BGX
❑ WT24S120-BGX	❑ WT30S120-BGX	❑ WT36S120-BGX

Features

- 16 Gauge, 300 series stainless steel
- 4" Backsplash with 1" return
- Welded construction for consistent metal gauge thickness throughout
- Sound deadened between top and bottom hat channels with double sided tape
- 1-5/8" Galvanized legs with high impact plastic feet, adjustable up to 1"
- Fully adjustable galvanized undershelf
- Shipped knocked down for reduced shipping costs and supplied with Allen wrench and screws

Options

❑ Custom Height (if less than 36")
❑ Cutout in Top (depending on size and location)
❑ Overshelves
❑ Undershelves
❑ Drawers
❑ Casters / Feet Upgrade

* For additional available options, contact Elkay SSP

Materials

- **Top:** 16 Gauge, 300 series stainless steel, 1-3/4" turned-down edge
- **Legs:** 1-5/8" Diameter heavy gauge galvanized tubing with galvanized leg gussets and high impact plastic feet, adjustable up to 1"
- **Undershelf:** Galvanized steel with 1-1/2" turned-down edge, fully adjustable

Flyer Product

NSF AUTOQUOTES The KCL CADalog

In keeping with our policy of continuing product improvement, Elkay SSP reserves the right to change product specifications without notice.

This specification describes an Elkay SSP product with design, quality and functional benefits to the user. When making a comparison of other producers' offerings, be certain these features are not overlooked.

Elkay SSP
421 N. Freya St.
Spokane, WA 99205
Phone: 800-726-0553 Fax: 509-535-1493

Website: www.sspinc.net
Email: sspsales@elkay.com
©2011 Elkay

Tundra Specialties

ELKAY SSP, LLC™

Item No.: _____ Qty.:____
Model No.: _____
Project No.:_____

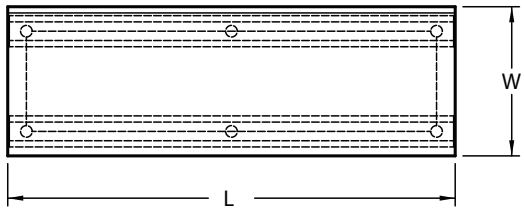

Size of Undershelf:
Common length = subtract 6" from length
24" Width = subtract 6.5" from width
30" Width = subtract 7.45" from width
36" Width = subtract 10" from width

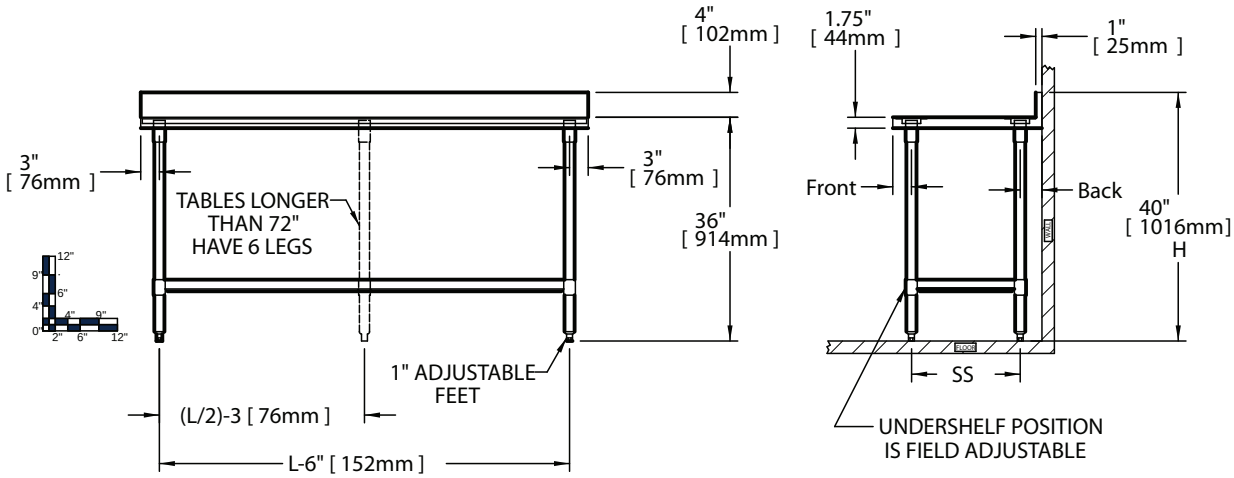

24" Work Table							30" Work Table							36" Work Table							Legs
	Overall Size				Weight			Overall Size				Weight			Overall Size				Weight		
	Length L		Height H					Length L		Height H					Length L		Height H				
Model Number	in.	mm	in.	mm	lbs.	kg	Model Number	in.	mm	in.	mm	lbs.	kg	Model Number	in.	mm	in.	mm	lbs.	kg	
WT 24 S 30 - BG X	30	762	40	1016	90	41	WT 30 S 30 - BG X	30	762	40	1016	103	47								4
WT 24 S 36 - BG X	36	914	40	1016	101	46	WT 30 S 36 - BG X	36	914	40	1016	113	51	WT 36 S 36 - BG X	36	914	40	1016	128	58	4
WT 24 S 48 - BG X	48	1219	40	1016	123	56	WT 30 S 48 - BG X	48	1219	40	1016	137	62	WT 36 S 48 - BG X	48	1219	40	1016	156	71	4
WT 24 S 60 - BG X	60	1524	40	1016	150	68	WT 30 S 60 - BG X	60	1524	40	1016	166	75	WT 36 S 60 - BG X	60	1524	40	1016	191	87	4
WT 24 S 72 - BG X	72	1829	40	1016	172	78	WT 30 S 72 - BG X	72	1829	40	1016	191	87	WT 36 S 72 - BG X	72	1829	40	1016	219	100	4
WT 24 S 84 - BG X	84	2134	40	1016	209	95	WT 30 S 84 - BG X	84	2134	40	1016	231	105	WT 36 S 84 - BG X	84	2134	40	1016	264	120	6
WT 24 S 96 - BG X	96	2438	40	1016	232	105	WT 30 S 96 - BG X	96	2438	40	1016	257	117	WT 36 S 96 - BG X	96	2438	40	1016	293	133	6
WT 24 S 108 - BG X	108	2743	40	1016	262	119	WT 30 S 108 - BG X	108	2743	40	1016	290	132	WT 36 S 108 - BG X	108	2743	40	1016	331	150	6
WT 24 S 120 - BG X	120	3048	40	1016	285	130	WT 30 S 120 - BG X	120	3048	40	1016	315	143	WT 36 S 120 - BG X	120	3048	40	1016	361	164	6

* Custom sizes also available

- Flyer Product
- Backsplash with Galvanized Undershelf
- Overall Length - in.
- Undershelf
- Overall Width - in
- Standard Series Work Table

Elkay SSP
421 N. Freya St.
Spokane, WA 99205
Phone: 800-726-0553 Fax: 509-535-1493

Website: www.sspinc.net
Email: sspsales@elkay.com
©2011 Elkay